T318 TECHNICAL MANUAL

Release 3.00 (22/06/2020)

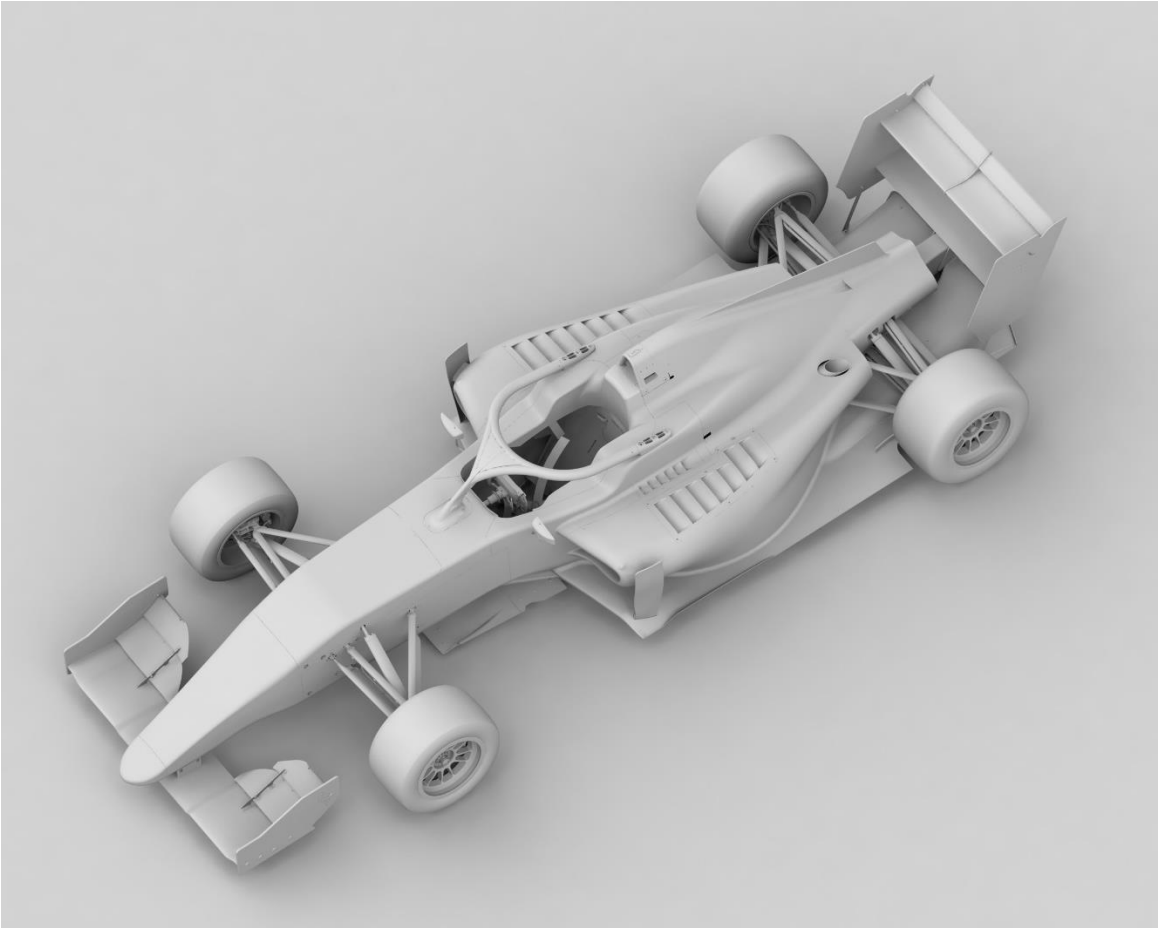

1 General Information

1.1 Releases

Modifications from previous release are in purple.

1.1.1 Release list

Version	Release Date	Author	Notes
0.02	20/06/2018	Tatuus	Startup version
1.00	03/07/2018	Tatuus	First release
1.01	04/07/2018	Tatuus	Minor updates
1.10	10/10/2018	Tatuus	Gearbox maintenance
1.20	12/12/2018	Tatuus	Halo installation, Aeromaps, Kinematic data, Gearbox torques
2.00	21/01/2019	Tatuus	Engine options added
2.01	24/01/2019	Tatuus	Pickup updates
2.10	10/02/2019	Tatuus	Front/Rear suspensions update (UMP/anti-effects)
2.20	01/03/2019	Tatuus	Differential info Radio plug Pirelli Data Booklet
2.30	05/04/2019	Tatuus	Brake system info Fuel machine option Sensors
3.00	22/06/2020	Tatuus	Mileage Chart update Aerodynamic chapter update Hankook Data Booklet ESA chapter update FIA Throttle Fail Safe Brake Bedding-in procedure VREF list Minor updates

1.2 TECHNICAL CONTACTS

1.2.1 Chassis

Tatuus Racing SpA
Via G. Verga, 12
20863 Concorezzo (MB) - Italy
Tel: +39 039 6040828
Fax: +39 039 6041764
Web: www.tatuus.it

1.2.2 Engine

AUTOTECNICA
Via A. Bernardi, 3
26041 Casalmaggiore (CR) - Italy
Contact: Giovanni Delfino
Tel. +39 0375 40174
Fax. +39 0375 40174

ORECA
Technopole du Circuit
58470 Magny-Cours
France
+33 (0) 3 86 21 08 00
+ 33 (0) 3 86 21 08 02

1.2.3 Gearbox

SADEV
6 rue Grand'Montains
85110 Saint Prouant
Tel: +33 2 51 66 42 68
Fax: +332 51 66 49 60
@ : sadev@sadev-tm.com
Web: www.sadev-tm.com

1.2.4 Electronic

1.2.5 Tires

1.2.6 Brakes

1.2.7 Dampers

1.2.8 Seat belts – Fire Extinguisher

1.3 General Agreement and Warranty

Tatuus is proud of the quality, success and reputation of their products and is delighted that you have chosen to use the T318 chassis.
The design of each chassis is the subject of much research and development, technical analysis and detailed testing. However, as with all motorsport products, it is vital that they are correctly maintained and adjusted for each individual circumstance. This manual is intended to ensure that you obtain the maximum performance and reliability from this chassis.
We would stress that after each event or prolonged period of running (suggested to be 5'000km) the chassis should be carefully inspected and stripped as appropriate.
This manual contains mileage recommendations for critical components detailed in section 1.6. If in doubt please contact our Commercial Department who will advise you or, if necessary, put you in contact with one of our engineers.

It is important to ensure that all adjustments and tolerances are as specified. The use of parts not supplied by Tatuus will automatically invalidate any warranty or other liability which would normally be assumed by Tatuus.

Your attention is drawn in particular to the following statement:
'Goods intended for motorsport or any related application, or for product development, evaluation or experimentation are supplied subject to the Customer recognizing that such goods may operate under extreme loads and conditions and that it is the Customer's responsibility to ensure that the goods are correctly inspected, adjusted and maintained at all times to suit the specific conditions in which they may be used.'

'Lightweight and weight optimized components are supplied subject to warranty only against manufacturing defects. It is possible that in certain conditions operating life may be reduced. Similarly, prototype, experimental or components manufactured to the Customer's design are supplied subject to warranty only against manufacturing defects.

Furthermore, such components, by their very nature, are not warranted as to their suitability for use or performance.'

'Tatuus shall have no liability to the Customer (other than liability for death or personal injury resulting from Tatuus' negligence) for any loss or damage of any nature arising from any breach of any expressed or implied warranty, term or condition of the contract or from any negligence or breach of statutory or other duty on the part of Tatuus in connection with the performance or purported performance of or failure to perform the contract other than as set out in this Condition. In no circumstances shall Tatuus be liable for any claims for indirect or consequential injury or damage (including loss of profits) arising from any such matters.'

1.4 Overview

Front track	1575 mm
Rear track	1530 mm
Wheelbase	2900 mm
Overall length	4855 Max mm
Overall width	1850 Max mm
Overall Height	950 mm (from reference plane)

Chassis	Composite Carbon fiber sandwich with Al/Nomex honeycomb, FIA F3/2019 (Ann.J Art.273) homologated
Bodywork	Carbon fiber
Front suspension	Push-rod / twin damper / spring
Rear suspension	Push-rod / twin damper / spring
Springs	Eibach 36mm
Dampers	Koni
Brakes	Brembo
Tires	Giti Hankook Pirelli
Wheels	OZ Racing
Engine	Autotecnica Motori Renault Sport Oreca Toyota
Exhaust	Aros
Electronics	Magneti Marelli / Next Solution / Motec
Gearbox	SADEV SLR82
Gearshift	Magneti Marelli ESA
Steering wheel	Tatuus / Next Solution
Battery	DEKA
Fuel cell	PREMIER FT5
Seat belts	Sabelt
Fire Extinguisher	OMP

1.5 GENERAL INFORMATION

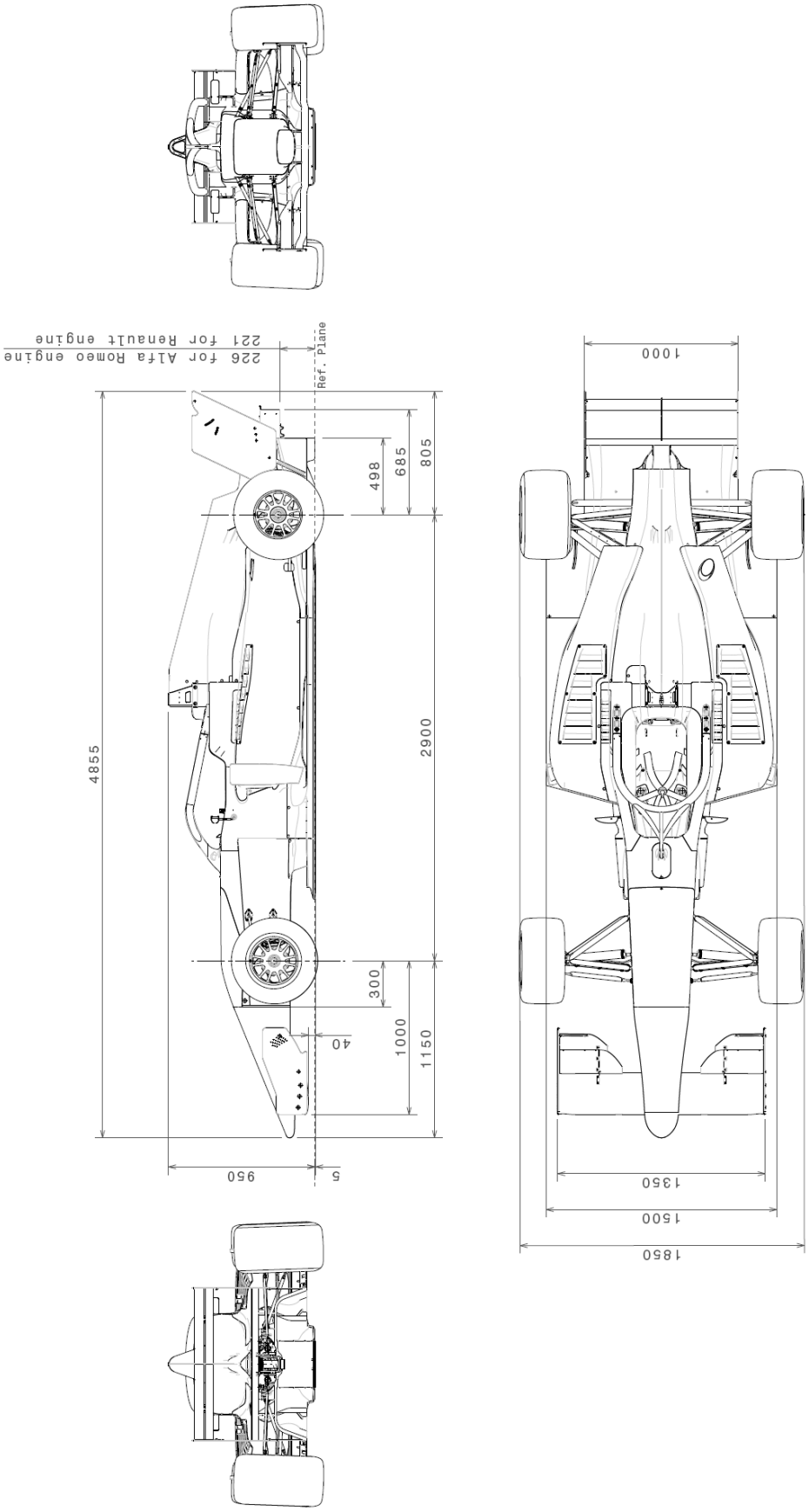
226 for Alfa Romeo engine
221 for Renault engine
Ref. Plane
4855
2900
805
685
498
300
1150
1000
40
950
5
1000
1350
1500
1850

1.6 MILEAGE CHART

The following chart should be used to ensure that component life is not exceeded and premature failures are prevented by regular inspection. Check and replace in accordance with the recommended distances below. Mark all parts for mileage tracing purposes and note in build records.
All parts not included in the list require inspection after 20,000km. Visual inspection should identify any parts with cracks, scratches, significant wear or corrosion.

NOTES: The table below is provided for guidance on the expected life of key components based on Tatuus' experience of this product in similar applications, however no warranty is implied by figures stated above and mileage targets are no substitute for testing and regular inspection of the chassis. Check all components after any accident or abnormal usage. In doubt, replace the components.

For safety reasons, please contact immediately Tatuus if you discover premature wear or problems.

Many of the components stated above with a maximum 'typical' life of 20'000km may be found to perform successfully for extended mileage however extended running above 20'000km is done at customer's risk.

	Inspection [km]	**Limit [km]**
Chassis		
Survival cell	10'000	20'000
Front crashbox	10'000	20'000
Rear crashbox	10'000	20'000
Wheel tethers		12 months
Rear Crashbox tether		12 months
Nosebox studs	2'500	5'000
Engine studs	5'000	10'000
Floor stays	2'500	5'000
Brake pedal	2'500	5'000
Throttle pedal	5'000	10'000
Front suspension		
Upright	5'000	10'000
Wheel bearing	5'000	10'000
Hubs	10'000	20'000
Hub bolts	2'500	5'000
Wheel spindle	5'000	10'000
Drive pegs	2'500	5'000
Wishbones	5'000	10'000
Push-rods	5'000	10'000
Suspension bracket	5'000	10'000
Front ackermann	2'500	5'000
Front anti-roll bar	2'500	5'000
Rocker assy	5'000	10'000
Steering		
Steering/toe arms	5'000	10'000

	Inspection [km]	Limit [km]
Steering column	5’000	10’000
Steering rack	5’000	10’000
Rack/pinion	5’000	10’000
Ball joint	1’250	5’000
Rear suspension		
Upright	5’000	10’000
Wheel bearing	5’000	10’000
Outer hub	10’000	20’000
Inner hub	5’000	10’000
Hub bolts	2’500	5’000
Wheel spindle	5’000	10’000
Drive pegs	2’500	5’000
Wishbones	5’000	10’000
Push-rods	5’000	10’000
Suspension bracket	10’000	20’000
Bottom forward bracket	5’000	10’000
Rear upright bracket	5’000	10’000
Rear anti-roll bar	2’500	5’000
Rocker assembly	5’000	10’000
Front Wing		
Front wing	5’000	15’000
Front pillars	5’000	15’000
Rear wing		
Front wing	5’000	15’000
Front pillars	5’000	10’000
Front endplates	5’000	15’000
Transmission		
Wheel shaft	5’000	10’000
Slave cylinder (sealings)	5’000	10’000
Release bearing	5’000	10’000
Gearbox		
Gearbox internals		see SADEV
ESA	5’000	10’000
ESA rubber mounting	1’000	3’000
Brake system		
Brake pedal	2’500	5’000
Brake balance bar	2’500	5’000
Master cylinders	5’000	10’000
Calipers	5’000	20’000
Disc bells	5’000	10’000
Brake discs	1’000	2’000
Oil lines	5’000	10’000
Cooling system		

	Inspection [km]	Limit [km]
Radiators	5’000	10’000
Water tank cap	2’500	5’000
Pipelines	10’000	20’000
Exhaust		
Tail pipe	3’000	6’000
Catalytic	2’500	5’000
Electrical system		
Battery	5’000	10’000
Switch panel	5’000	10’000
Master switch	5’000	10’000
Marshall switches	5’000	10’000
Chassis loom	10’000	20’000
Gearbox loom	10’000	20’000
Powerbox	10’000	20’000
Steering wheel	5’000	10’000
GCU	10’000	20’000
Extinguisher system		
Extinguisher bottle		see expire date
Extinguisher mountings	5’000	10’000
Extinguisher pipelines	10’000	20’000
Extinguisher CU	5’000	10’000
Engine lubrication system		
Oil lines	10’000	20’000
Tank filter cartridge	5’000	10’000
Fuel system		
Fuel tank		see expire date
Fuel pump	5’000	10’000
Fuel filter	2’500	5’000
Fuel hoses	10’000	20’000

2 SAFETY

This chapter enlist the Homologated Safety Devices, these parts cannot be modified or repaired without the approval of Tatuus.

2.1 SURVIVAL CELL

The survival cell is the main safety and structural component of the car and it has been approved by the FIA, great attention must be paid in checking for structural failure not later than two years after delivery from Tatuus factory, and after each major accident. Chassis must be checked and repaired by a center authorized by Tatuus.

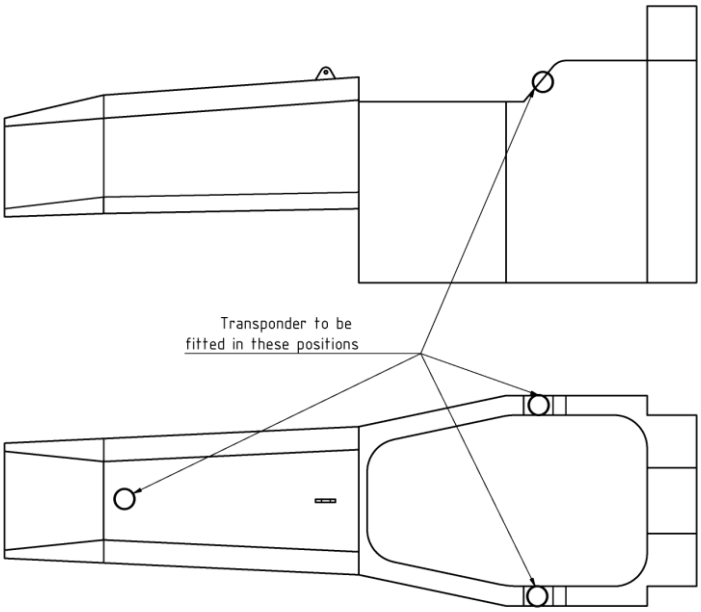

2.2 EXTRACTABLE SEAT

The seat must be removable without the need to cut any of the seat belts or remove the harness buckle.

The shoulder and lap belts must fall away over the seat edges as it is withdrawn and the crotch straps must pass freely through the seat bottom hole or holes, which must be located in front of the driver's crotch.

Any seat liner must have the same holes as the seat shell, identical and perfectly aligned with them in order to prevent the harness straps being trapped.
However, if the lap straps have to pass through holes in the seat, it is necessary to fit the car with a harness having the buckle attached to a shoulder belt, given that the buckle will not pass between the driver's body and the side of the seat.

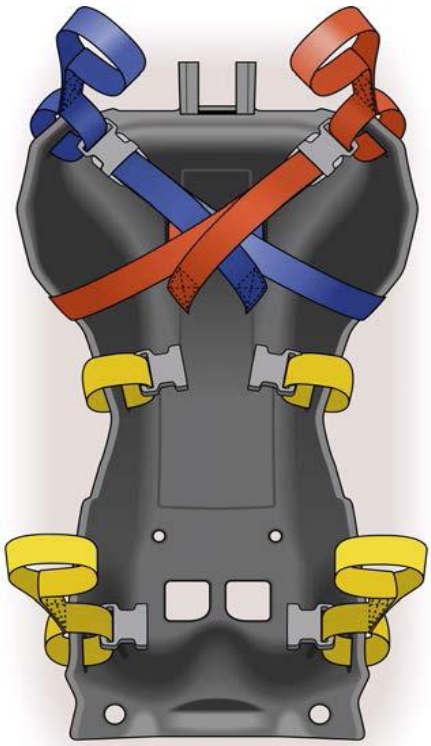

Any seat made from foam must be covered with a non-flammable and non-combustible material.

2.3 Driver Padding

As per FIA regulation:

Rear area of headrest padding [14.6.2]

> *If necessary, and only for driver comfort, an additional piece of padding no greater than 10mm thick may be attached to this headrest provided it is made from the same material.*

Side areas of headrest padding [14.6.3]

> *If necessary, and only for driver comfort, an additional piece of padding no greater than 20mm thick may be attached to this headrest provided it is made from the same material which incorporates a low friction surface.*

Leg padding [14.6.5]

> *The leg padding must cover the area […] 100mm behind the face of the rearmost pedal when in the inoperative position.*

Teams are therefore allowed to cut the padding according to driver installation.

2.4 Seat Belts

The straps must be securely fixed to the car and must comply with FIA standard 8853-2016.

2.5 FRONT IMPACT STRUCTURE

The front impact is one of the major safety and structural component of the car and it has been approved by the FIA, great attention must be paid in checking for structural failure not later than two years after delivery from Tatuus factory, and after each major accident. The structure must be checked and repaired by a center authorized by Tatuus.

2.5.1 Retention system adjustment

The retaining pins of the front impact structure must be properly set to ensure the correct installation.

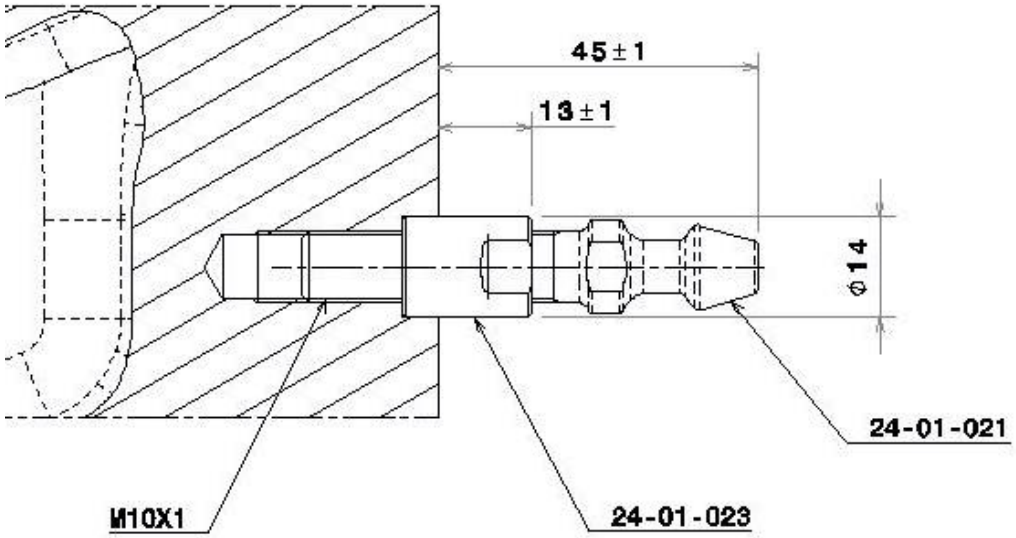

2.5.2 Front nose repair specification and procedure

2.5.2.1 Applicable requirements

The following procedure is applicable only when the damage is contained in the first 100mm from the nose tip (715mm from the chassis bulkhead), all the other damages must be inspected by the manufacturer.

2.5.2.2 Replacement procedure

Spare nose tip is available as spare part, the reference code is 2401032

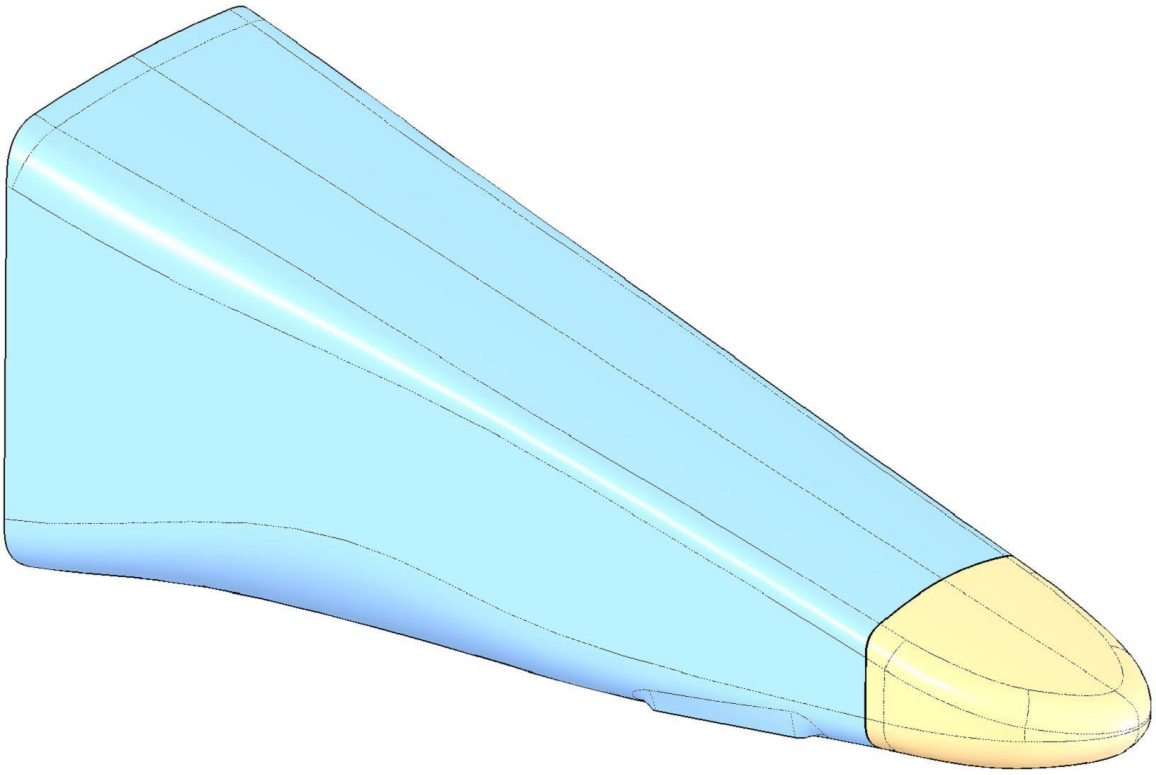

1. Trace a line parallel to the chassis bulkhead 700 mm from the bulkhead, you should find the line 15 mm from the old nose tip junction.
2. Cut off the nose tip forward the traced line.
3. Using sandpaper on the outer surface, reduce the thickness of the crashbox by about 1mm for a length of 15-25 mm (red area).

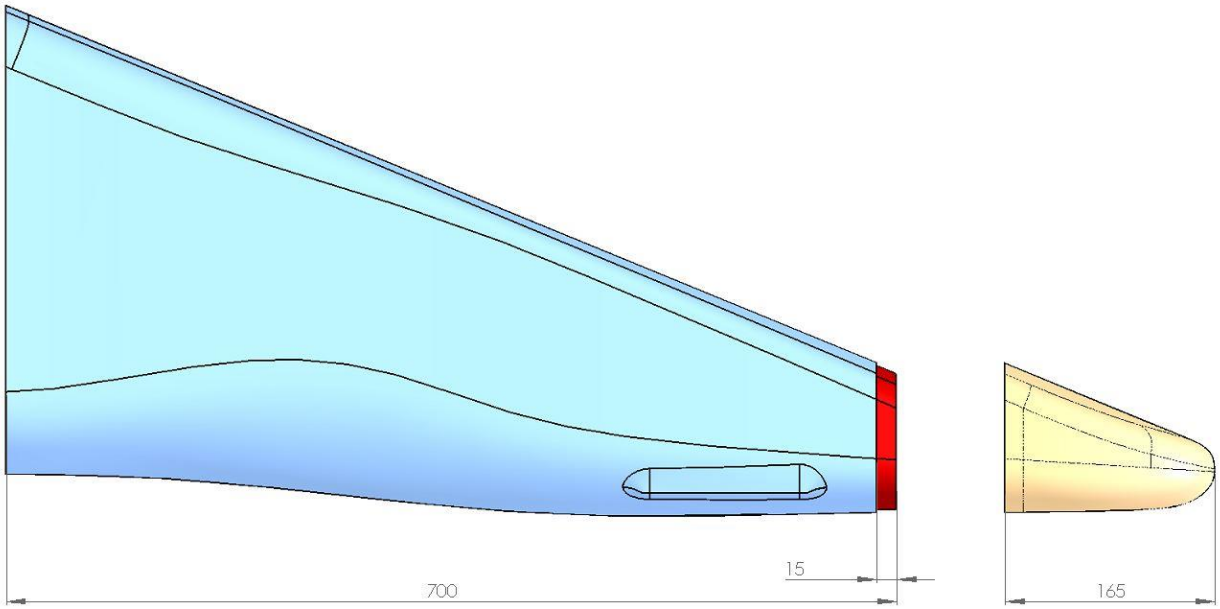

4. Attention must be paid to sandpaper the outer surface; at the depth of 1 mm you should find the resin between first and second ply.
5. Use sandpaper on the new nose tip inner surface to produce a rough surface that will match the outer surface of the crashbox.
6. Spread specific resin 3M 9323 over the junction surface, carefully respect the percentage between resin and catalyst:
7. 3M 9323 Mixing specification:

	Resin	Catalyst
Weight ratio	100 g	27 g
Volume ratio	100 g	31 g

8. Position the new nose tip cleaning the excess of resin; new nose tip can be hold in position with high temperature tape.
9. Cure the assembly on the oven following the specific temperature cycle for 3M 9323: 2 hours at 60°C.

2.6 Rear Impact Structure

The rear impact is one of the major safety and structural component of the car and it has been approved by the FIA, great attention must be paid in checking for structural failure not later than two years after delivery from Tatuus factory, and after each major accident. The structure must be checked and repaired by a center authorized by Tatuus.

2.7 Side Impact Structure

The side impact is one of the major safety and structural component of the car and it has been approved by the FIA, great attention must be paid in checking for structural failure not later than two years after delivery from Tatuus factory, and after each major accident. The structure must be checked and repaired by a center authorized by Tatuus.

2.8 HALO

2.8.1 Installation procedure

General notes:

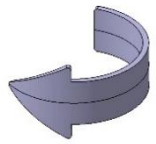	grey arrow: unscrew/screw but **not tighten**
	green arrow: screw **and tighten**

When installing the HALO apply on the bolts some water and oxidation resistant grease. As example the PETRONAS TUTELA Z2 grease is suitable for this purpose.

1. Insert the front fairing (24-01-043) on the HALO center bar

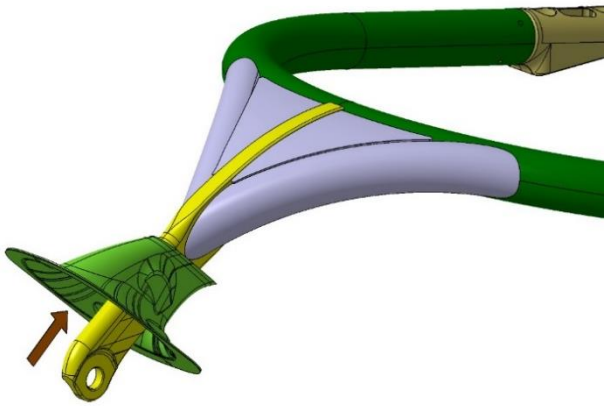

2. Install the front bracket on the HALO (24-01-010)

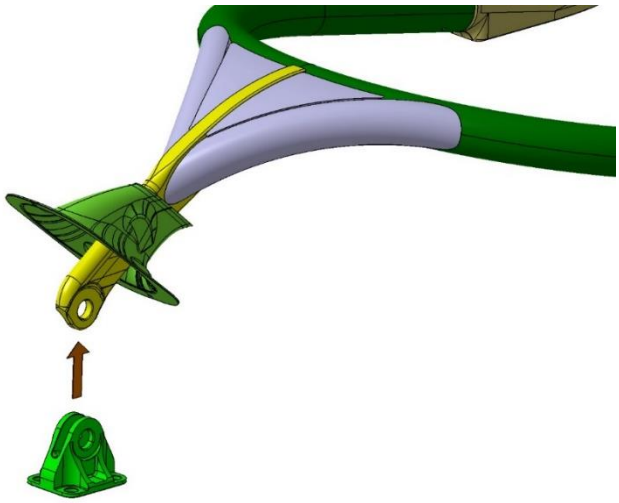

3. Fasten the HALO front fixing screw (24-01-017) and pin (24-01-016). **Do not apply any tightening torque**.

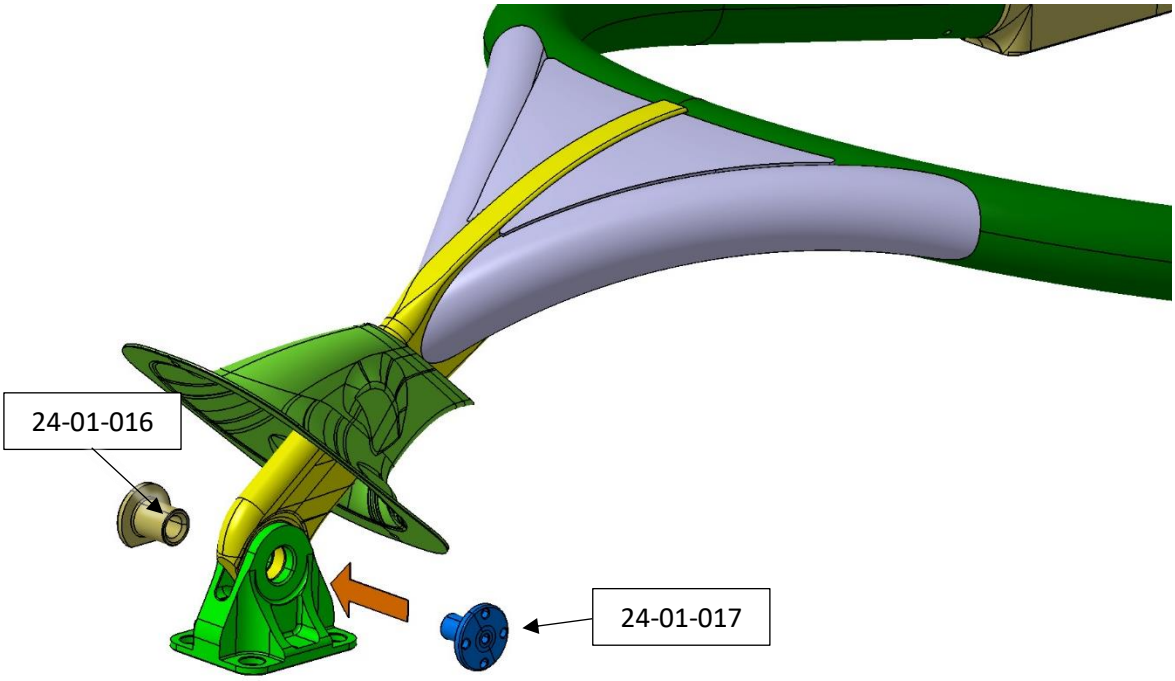

4. Please note that the HALO front fixing screw (**24-01-017**) shall be on the **left side** and the HALO front fixing pin (**24-01-016**) shall be on the **right side**.
5. **Do not apply any tightening torque.** Screw the HALO front fixing screw (24-01-017) until the screw's under-head gets in contact with the plane of the counterbore on the front bracket. At this point do not apply any tightening torque **but** loose the HALO front fixing screw (24-01-017) one turn (counterclockwise).

6. Place the assembly obtained at point 3 on the chassis.

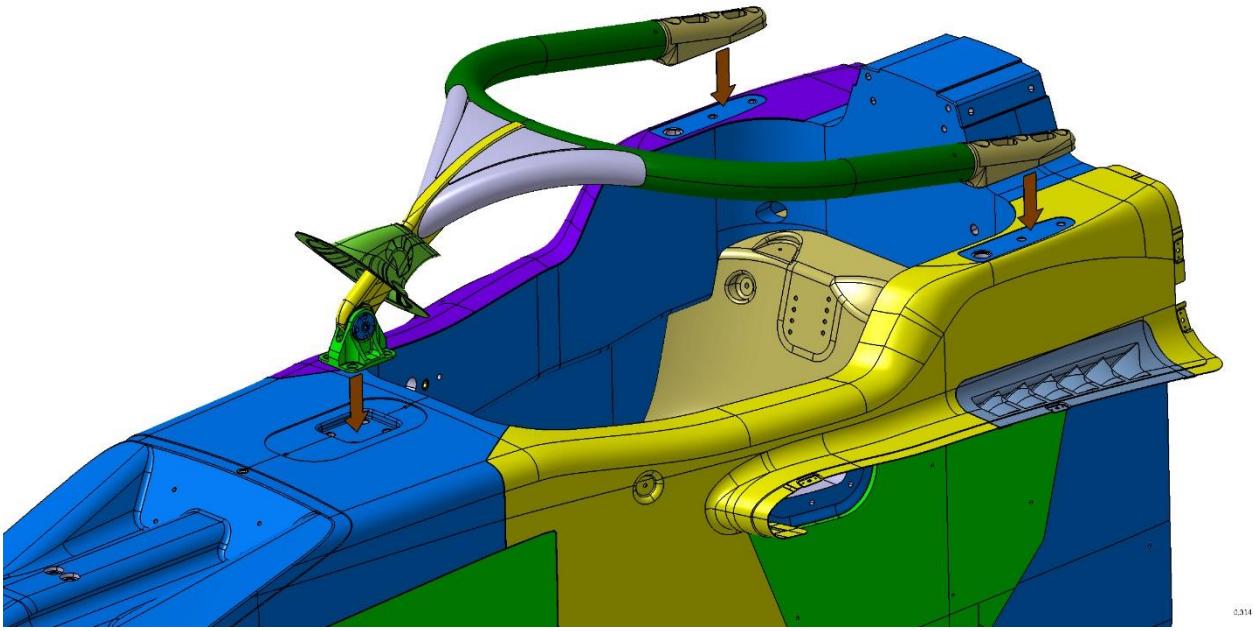

7. Fasten the two shoulder bolts (24-01-033). **Do not apply any tightening torque.** Screw the bolts until the screw's underhead gets in contact with the plane of the counterbore on the HALO foot. At this point do not apply any tightening torque **but** loose the bolt one turn (counterclockwise)

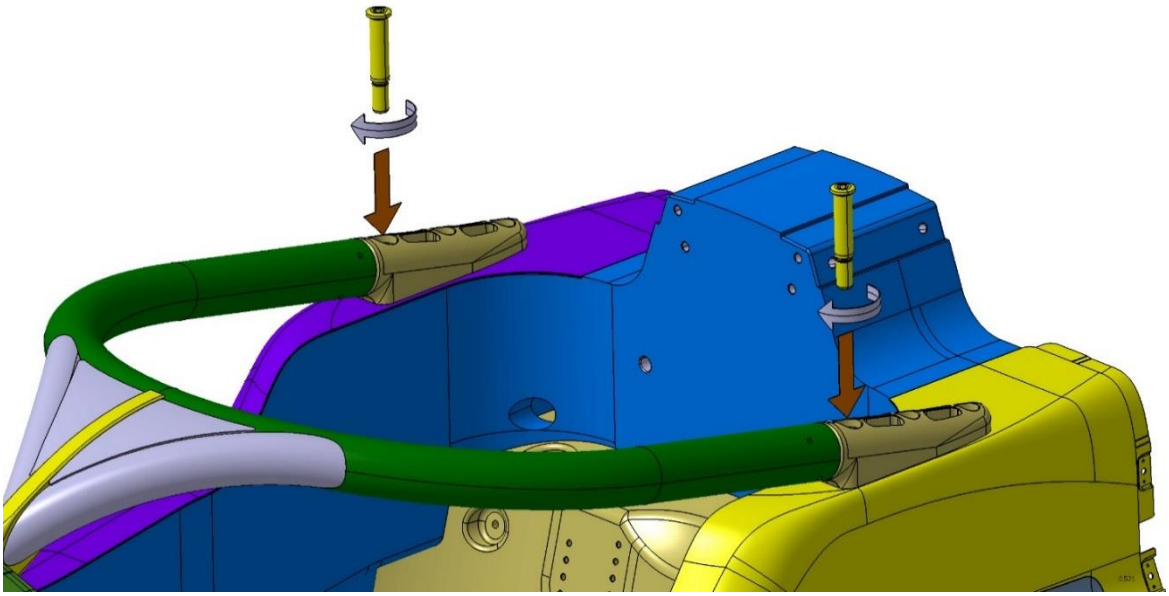

8. Fasten the two M12X55 bolts. **Do not apply any tightening torque.** Screw the bolts until the screw's underhead gets in contact with the plane of the counterbore on the HALO foot. At this point do not apply any tightening torque **but** loose the bolt one turn (counterclockwise)

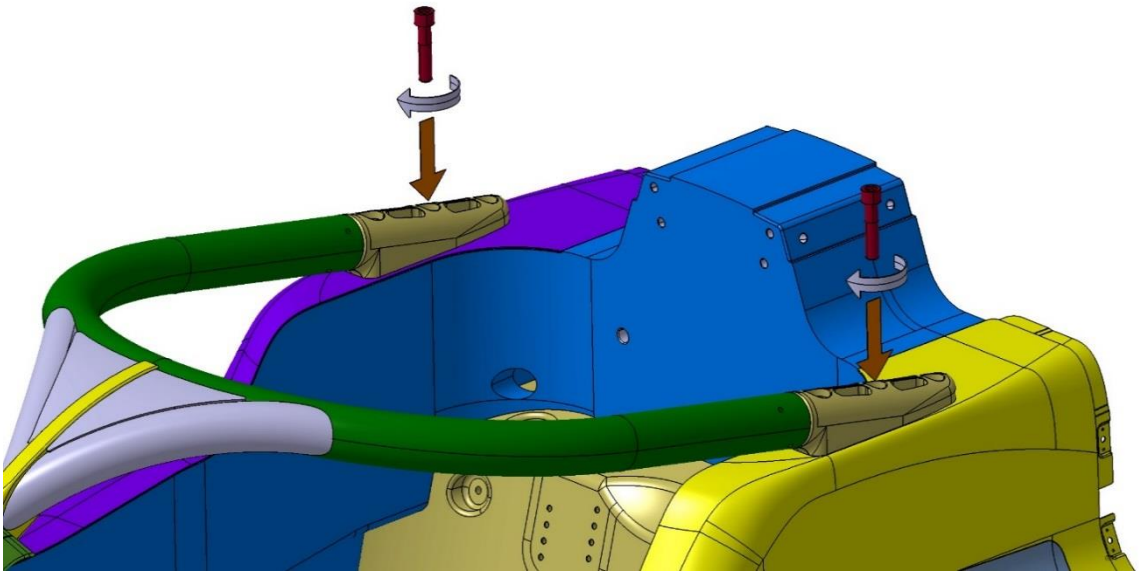

9. Fasten the two M12X30 bolts. **Do not apply any tightening torque.** Screw the bolts until the screw's underhead gets in contact with the plane of the counterbore on the HALO foot. At this point do not apply any tightening torque **but** loose the bolt one turn (counterclockwise)

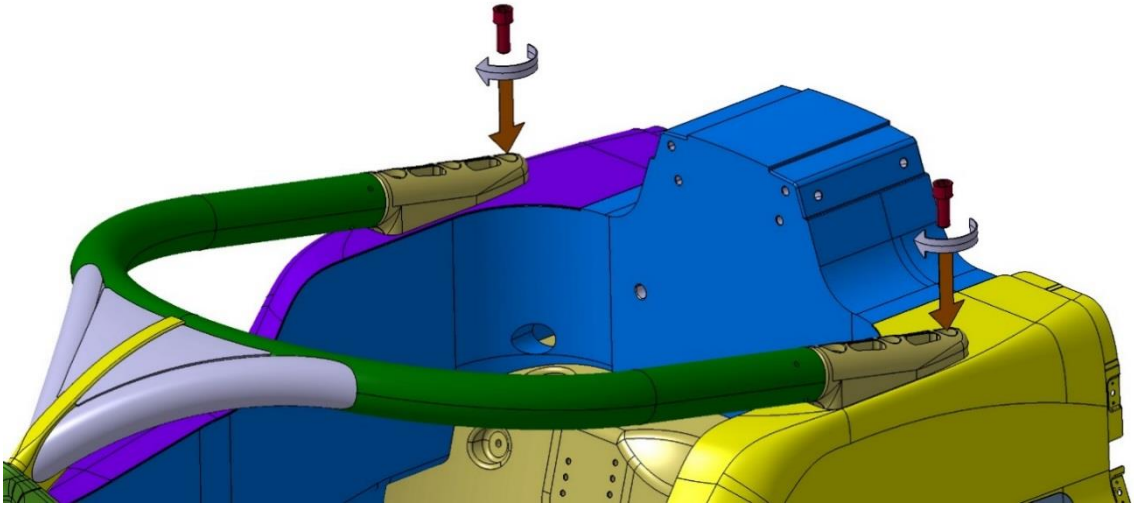

10. Fasten the four MS21250-08-08 bolts. **Do not apply any tightening torque.** Screw the bolts until the screw's underhead gets in contact with the plane of the counterbore on the front bracket. At this point do not apply any tightening torque **but** loose the bolt one turn (counterclockwise)

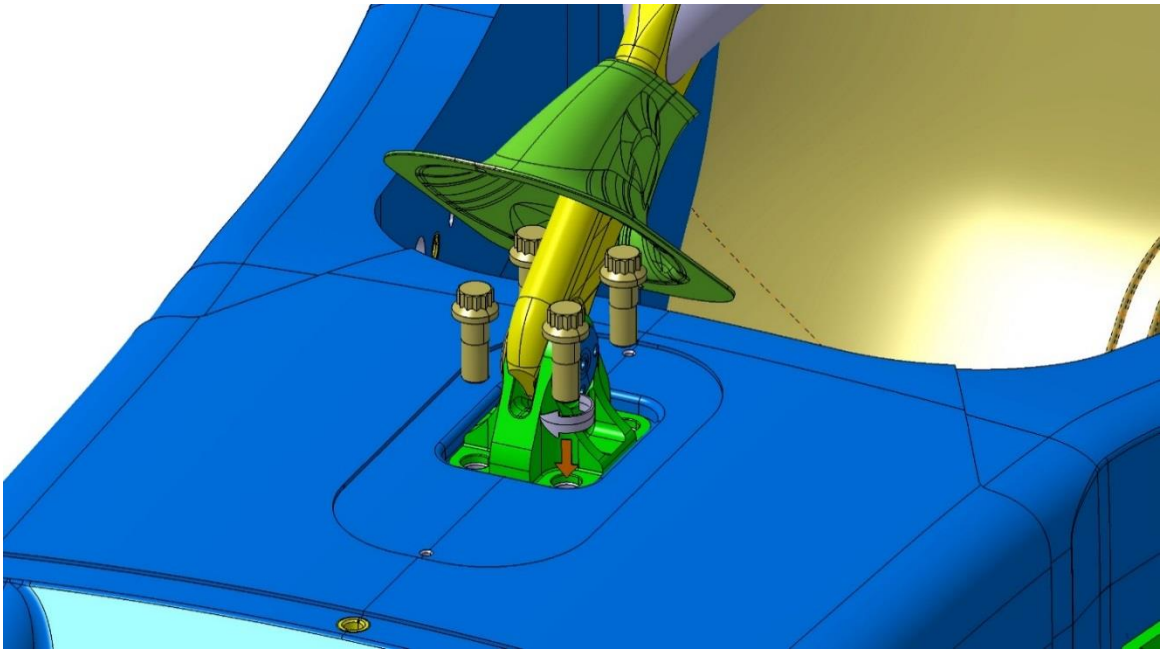

11. Tighten the two shoulder bolts 24-01-033. **Do not tighten to target value one bolt first and then the other.** Apply the tightening torque gradually, keeping the balance on the two bolts. Target value is **51Nm**

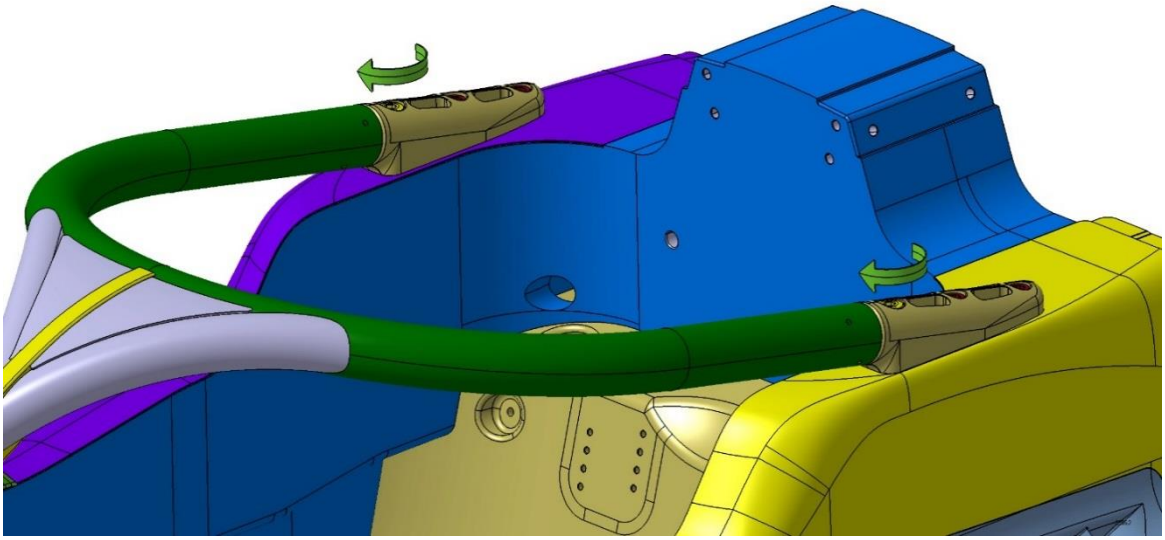

12. Tighten the two M12X55 bolts. **Do not tighten to target value one bolt first and then the other.** Apply the tightening torque gradually, keeping the balance on the two bolts. Target value is **51Nm**

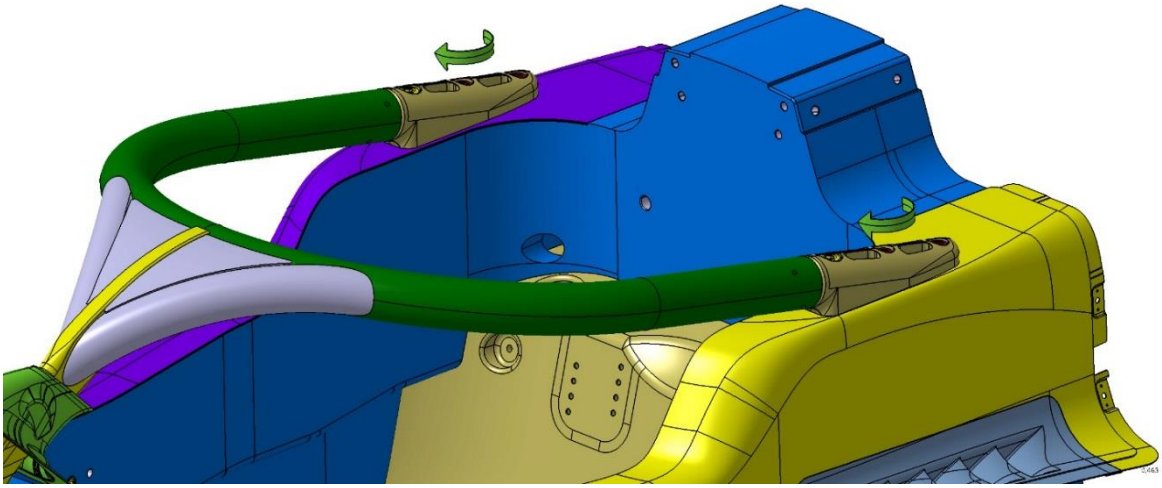

13. Tighten the two M12X30 bolts. **Do not tighten to target value one bolt first and then the other.** Apply the tightening torque gradually, keeping the balance on the two bolts. Target value is **51Nm**

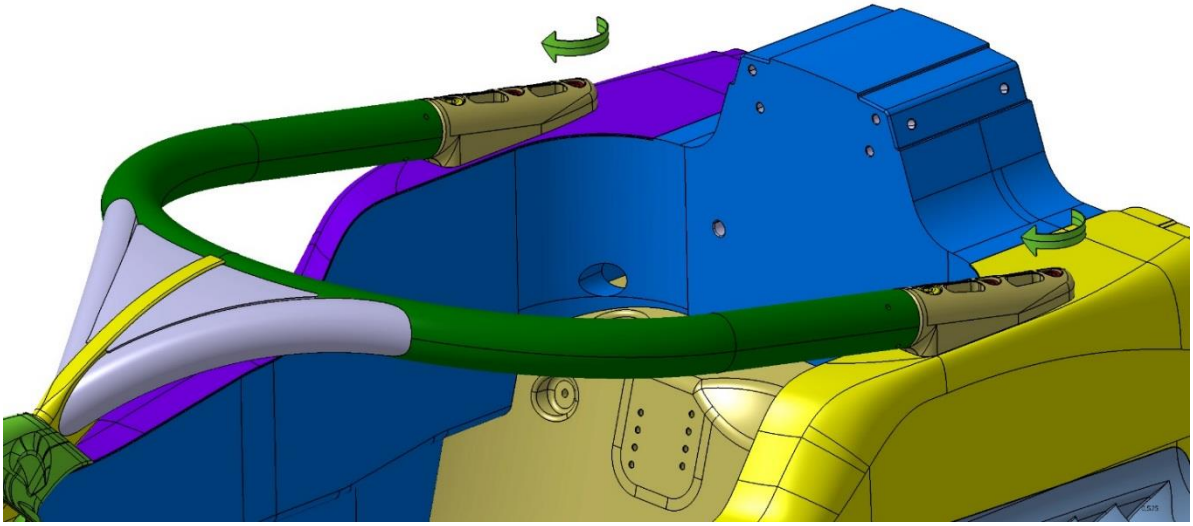

14. Tighten the four MS21250-08-08 bolts. **Do not tighten to target value one bolt first and then the other.** Apply the tightening torque gradually, keeping the balance on the four bolts. Target value is **51Nm**

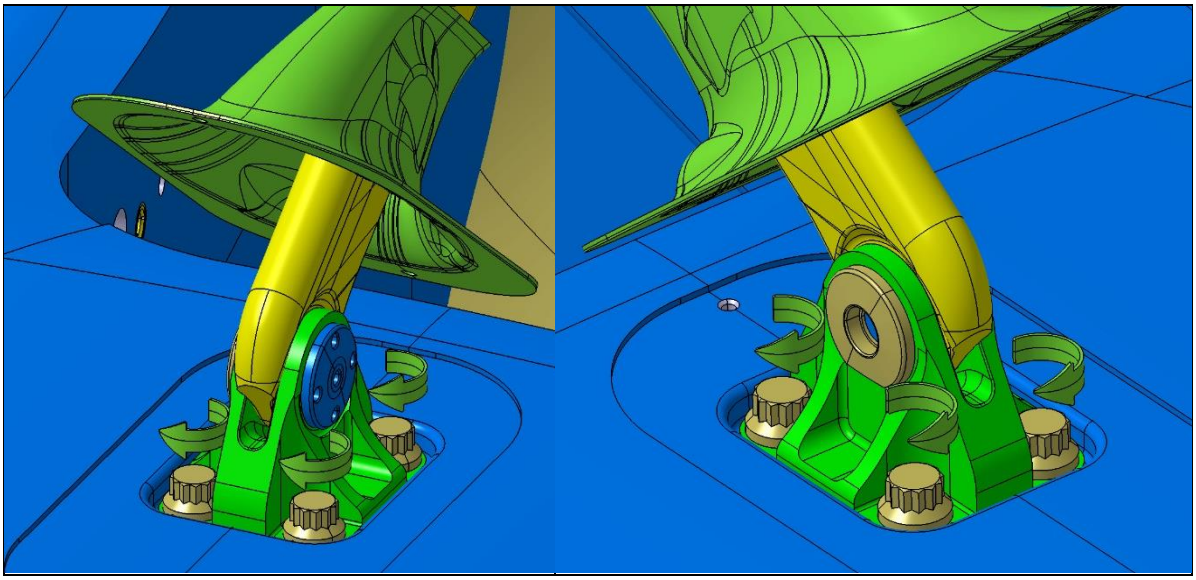

15. Double check the tightening torque on each bolt starting from the two shoulder bolts, then on the M12 bolts and finally on the MS21250-08-08

16. Tighten the HALO front fixing screw (**24-01-017**)

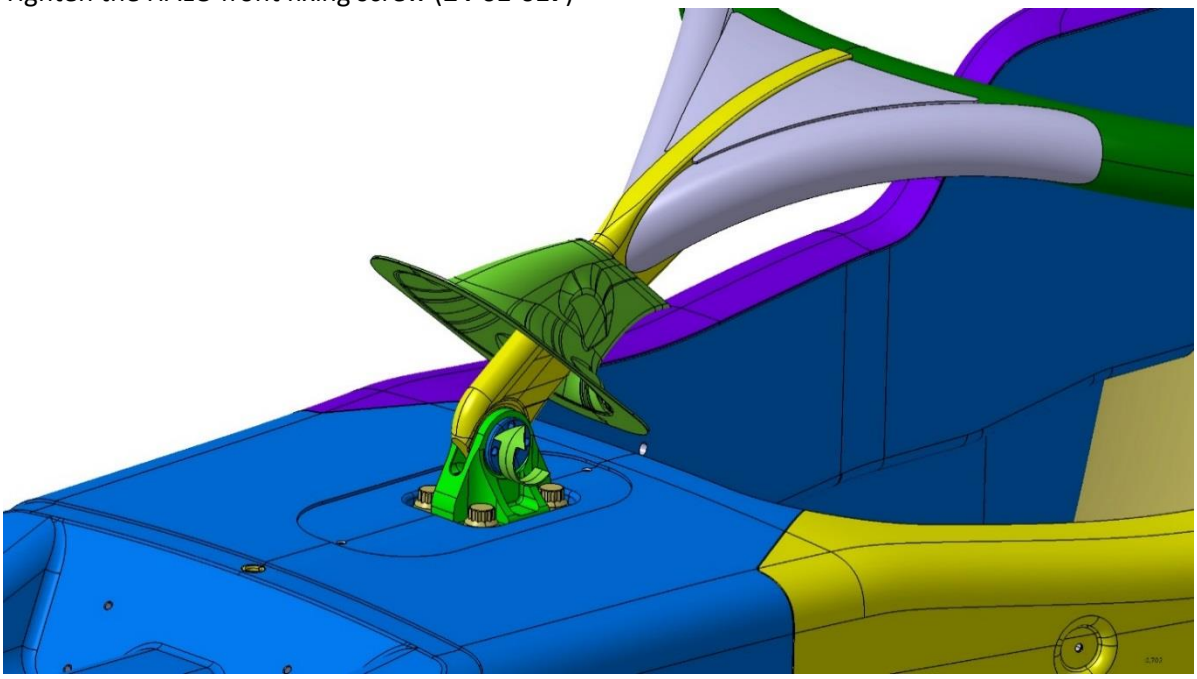

17. Position the front fairing (24-01-043), and fix it with two button head bolts (UNI7380-TX-M5X10)

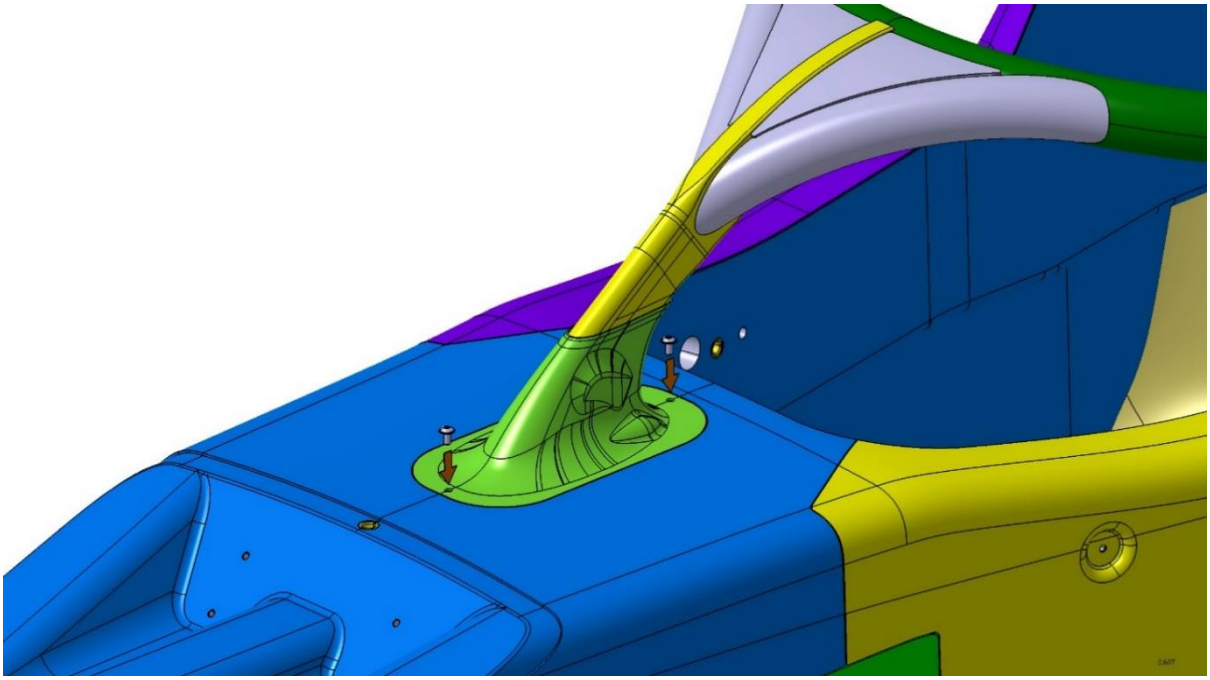

2.8.2 Disassembly procedure

1. Lift the front fairing

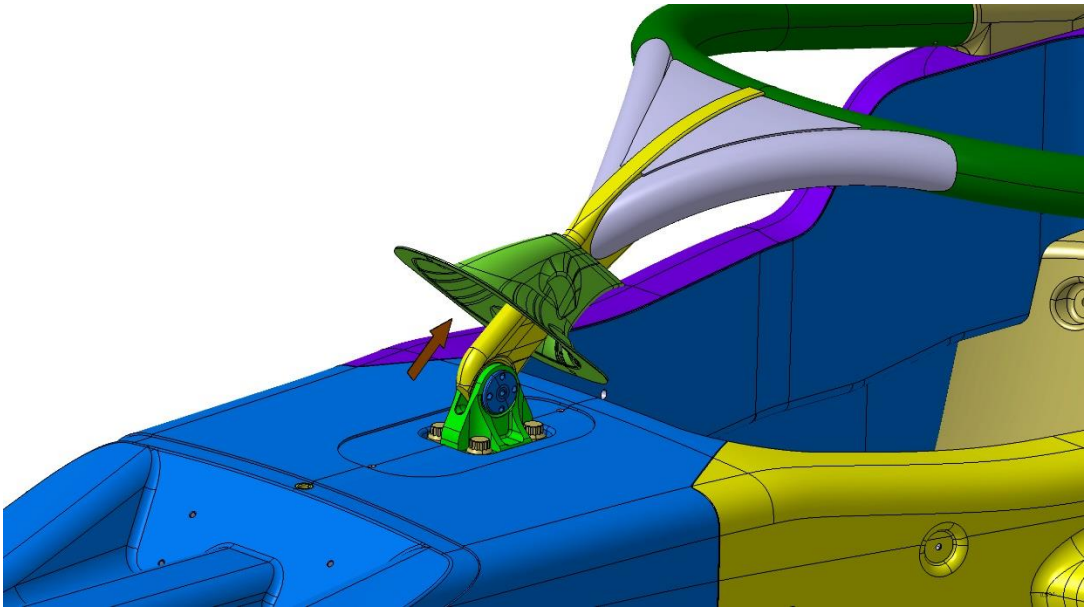

2. Unscrew and remove the four MS21250-08-08 bolts. **Do not unscrew one bolt first and then the other.** Loose the bolts gradually, keeping the balance on the four bolts

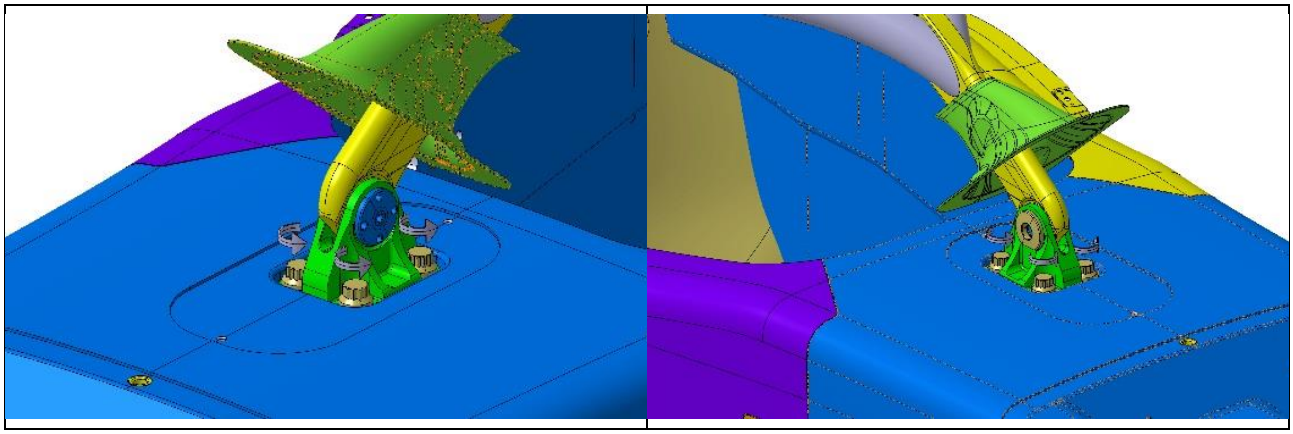

3. Unscrew and remove the M12X30 bolts. **Do not unscrew one bolt first and then the other.** Loose the bolts gradually, keeping the balance on the two bolts

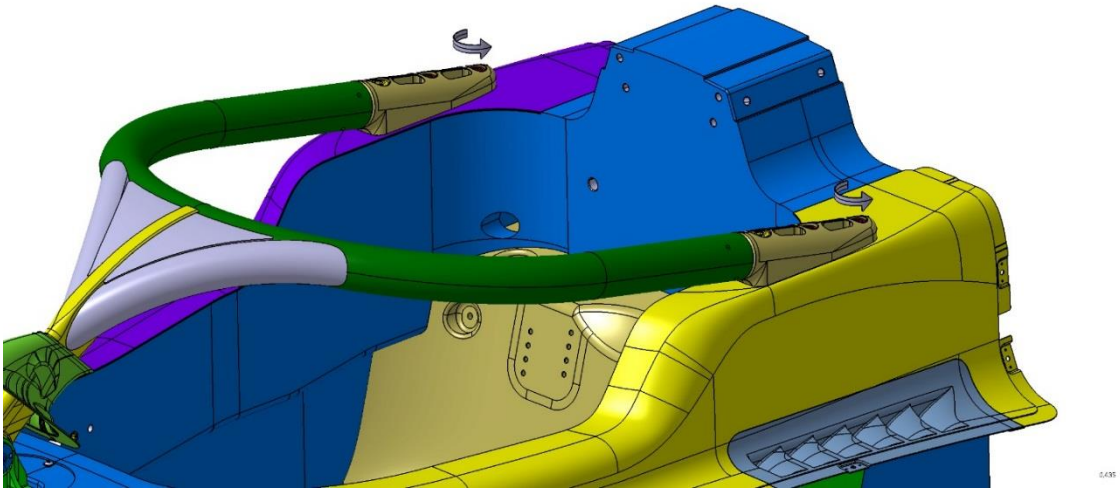

4. Unscrew and remove the M12X55 bolts. **Do not unscrew one bolt first and then the other.** Loose the bolts gradually, keeping the balance on the two bolts

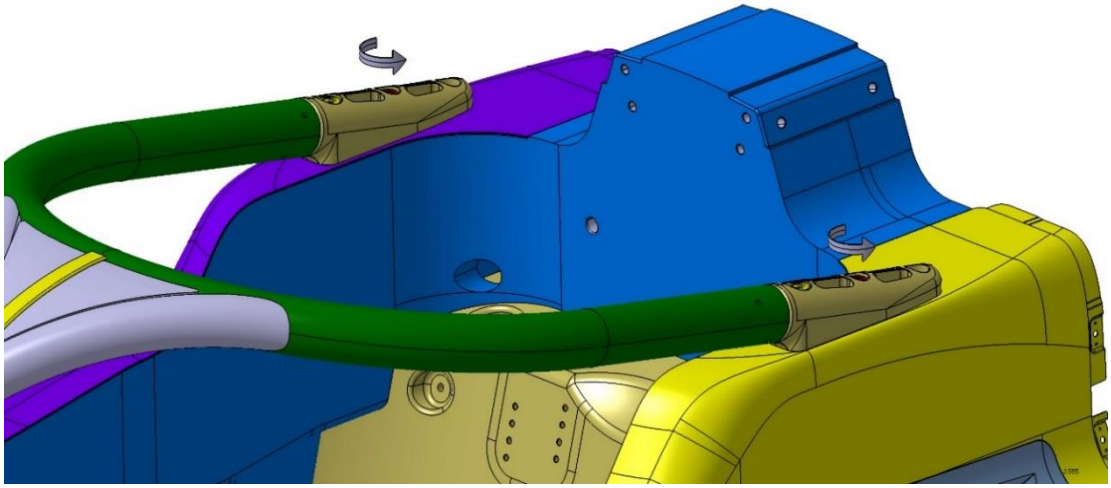

5. Unscrew and remove the two shoulder bolts (24-01-033). **Do not unscrew one bolt first and then the other.** Loose the bolts gradually, keeping the balance on the two bolts

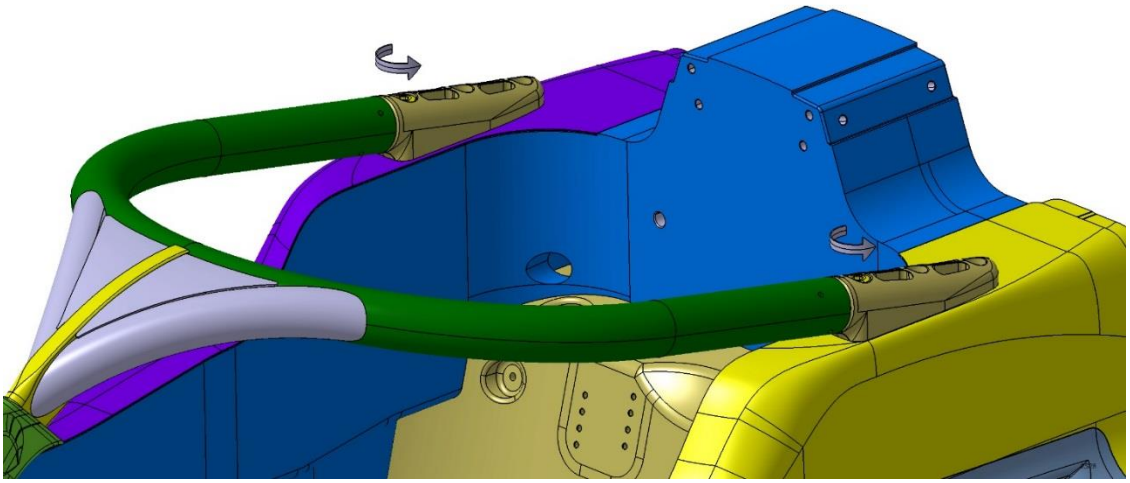

2.9 Steering Column

The steering column has an integrated collapsible section ① to absorb impact energy. Extreme attention must be paid on this part to avoid any damage or overload.

IMPORTANT: in case of impact the aluminum crashbox must be replaced and column carefully inspected.

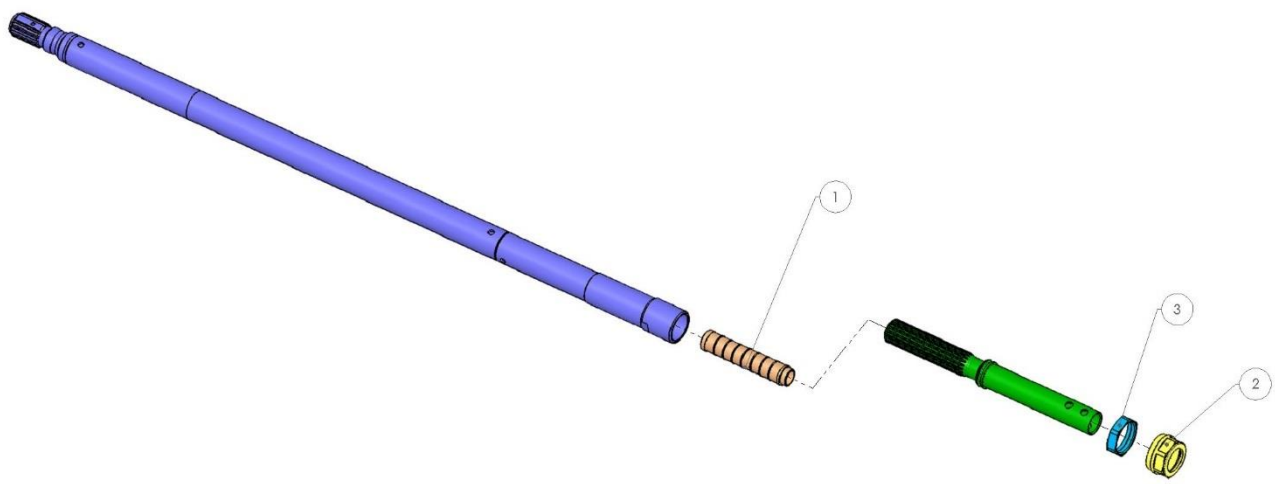

2.10 Wheel Tethers

Cortex 6kJ (FIA 8864-2013 standard)

It is recommended to replace wheel tethers if:

- The cable has been on the car for more than 12 months
- Accident
- The cable has been damaged, i.e. the braid or tape have been damaged exposing the fiber
- The cable has been over-tensioned

2.11 Rear Crashbox Tethers

Cortex 3kJ (FIA 8864-2013 standard)

It is recommended to replace wheel tethers if:

- The cable has been on the car for more than 12 months
- Accident
- The cable has been damaged, i.e. the braid or tape have been damaged exposing the fiber
- The cable has been over-tensioned

2.12 Fire Extinguisher

Before every race, replace the battery in the electrical control. If the battery is dead, the system will not activate.
Before every race, make sure that the needle on the bottle gauge is in the green zone. When the bottle gauge needle is outside the green zone, the extinguishing system is drained and must be charged.

When the control box lever switch is in the OFF position, the extinguishing system is disabled. Check that the switch is in the ON position before using the vehicle.
When the switch is set to ON the green LED ④ on the cockpit panel will turn ON.

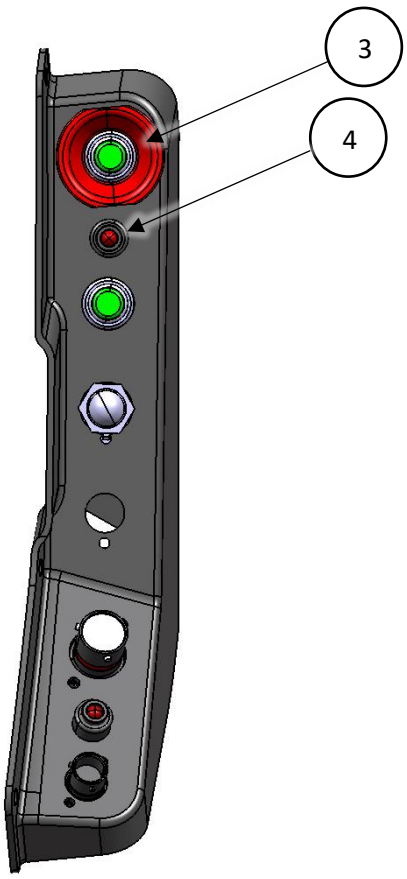

Before connecting the control unit to the bottle, use a multimeter to check that:

- whit the lever switch on the control unit in the OFF position, when either of the activation buttons is pressed the potential difference between the ends of the wires is about 7 - 8V
- with the lever switch on the control unit in the ON position, when either of the activation buttons is pressed the potential difference between the ends of the wires is about 9V when neither of the activation buttons are pressed the potential difference between the ends of the wires is 0V.

(PLEASE NOTE: after pushing either of the activation buttons, potential built up in the system needs to be discharged before it gets back to zero. This can easily be achieved by touching the connectors).
Before connecting the cable to the valve, switch the control unit to OFF mode.
With the control unit switch in the OFF position, connect the bottle's explosive capsule.

With the switch still in the OFF position, press one of the buttons and check that the LED turns on, thus indicating that the system is connected correctly.

Activating devices:

- OMP Extinguisher box, installed behind the driver's seat
- Cockpit panel: push-pull button #3. WARNING, once activated the button must be pulled to be rearmed.
- Marshall switch: located behind the main rollhoop. WARNING, once activated the unit must be rearmed releasing the lock ①.

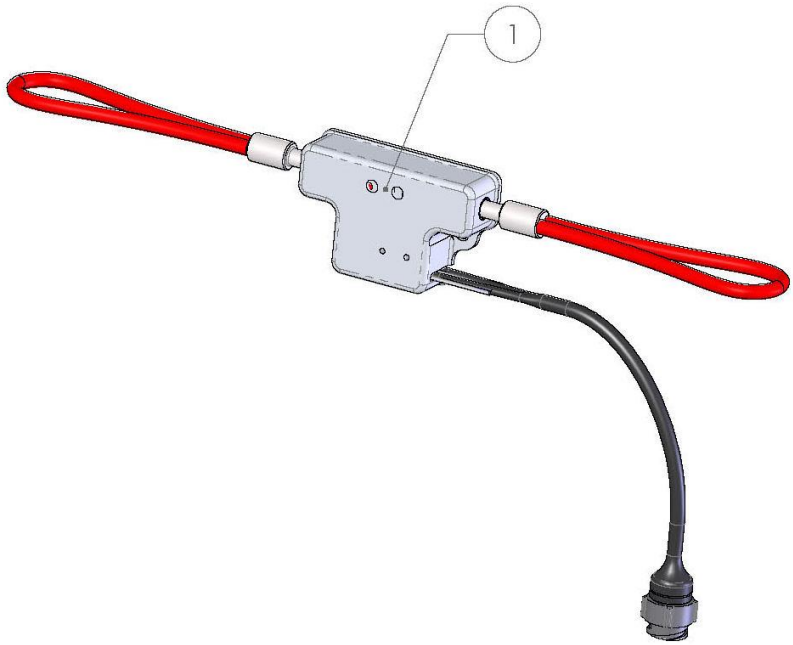

The LED verifies the functionality of the system and turns on ONLY when the extinguisher valve is connected to the system. If the LED does not turn on after having connected the system, check the connections and/or try replacing the battery.

2.13 Fuel Cell

Premier FT5
Rubber bladders should be used for no more than 5 years after the date of manufacture, unless inspected and recertified by the manufacturer for a period of up to another 2 years.

2.14 Rain Light

Tatuus 12x High intensity LED
A minimum of 85% of the LED's must be operational at any time.

2.14.1 Rain Light modes

The rain light operates different modes according to car condition:

- Main switch ON: LED turning
- IGN ON + Engine OFF/Stall: 10Hz flashing
- Rain Light ON: 4Hz flashing
- Pit Limiter ON: 1.25Hz flashing

2.15 Clutch Disengagement

In case of a sudden stall, the car can still be moved following this procedure:

1. Press the clutch.
2. Turn the valve ①.
   To avoid an improper/unwanted use, the valve ① is protected by a cover.
3. Release the clutch pedal (note: the pedal might remain pushed).
4. The car can be moved.

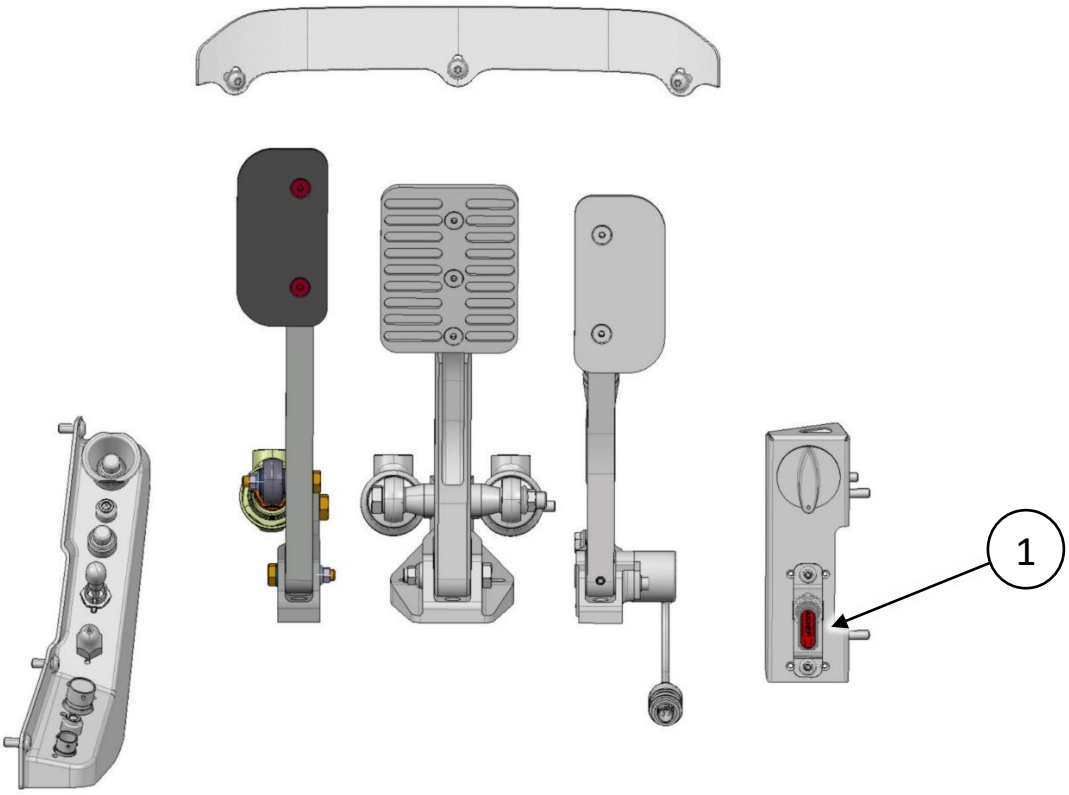

2.16 FIA Throttle Fail Safe

The car is equipped with a throttle fail safe algorithm, which, in case throttle and brake pedal are pressed at the same time, overrides the throttle and cuts the engine.

	Alfa Romeo	Renault
Car Speed	> 10 km/h	> 10 km/h
Engine rpm	> 2'000 rpm	> 2'000 rpm
Brake Pressure (Front and/or Rear)	> 50 bar	> 40 bar
Throttle Pedal	> 70 %	> 70 %
Time	> 150 ms	> 150 ms

If Throttle Fail Safe strategy occurs, a full power cycle (Ign + Main) is needed to reset it and restart the engine.

3 CHASSIS

3.1 WORKSHOP TOOLS

3.1.1 Front Jacking

The highlighted area is suitable to carry the weight of the car, the jack plate should fit as better as possible the underwing surface.

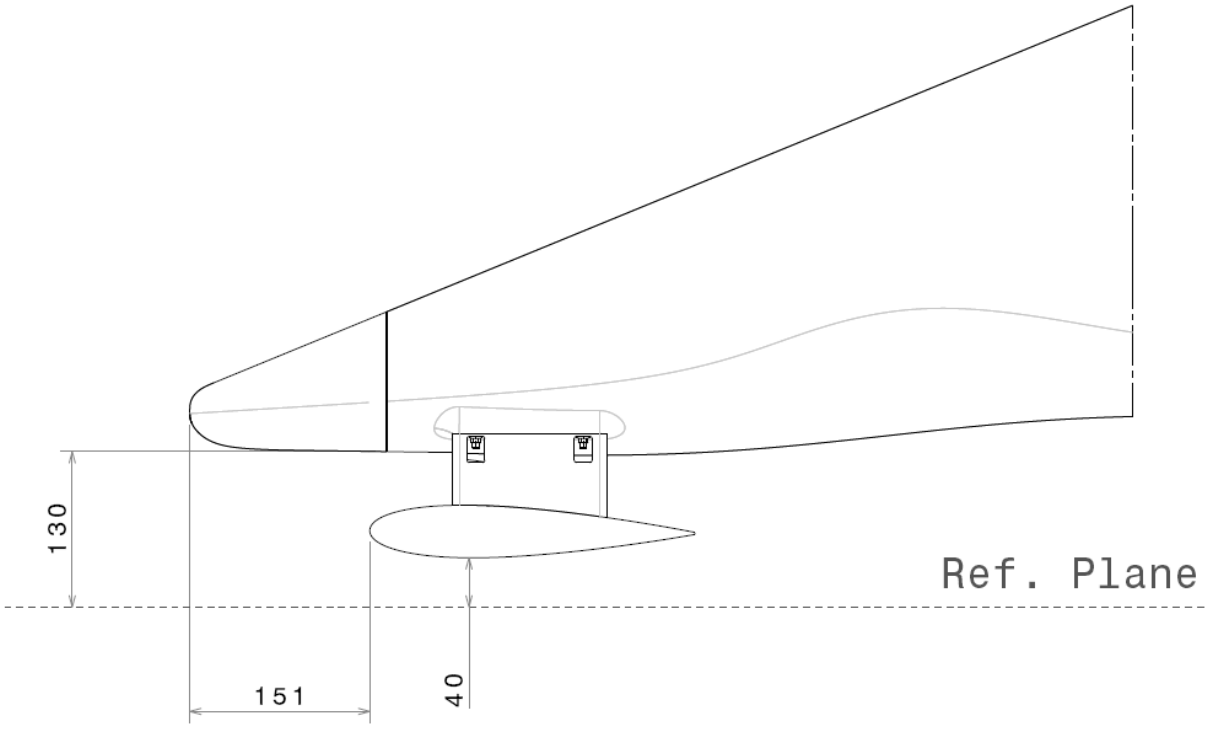

3.1.2 Rear Jacking

The highlighted jacking points are suitable to carry the weight of the car.

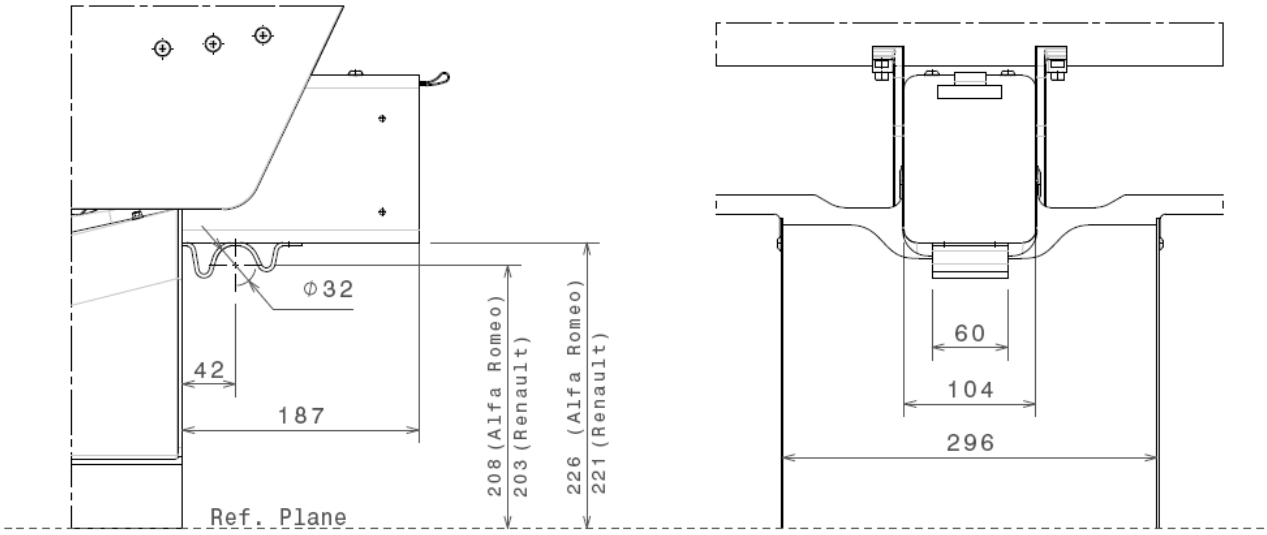

3.2 SETUP TOOLS

Here below some views of the main reference points

3.2.1 Front references

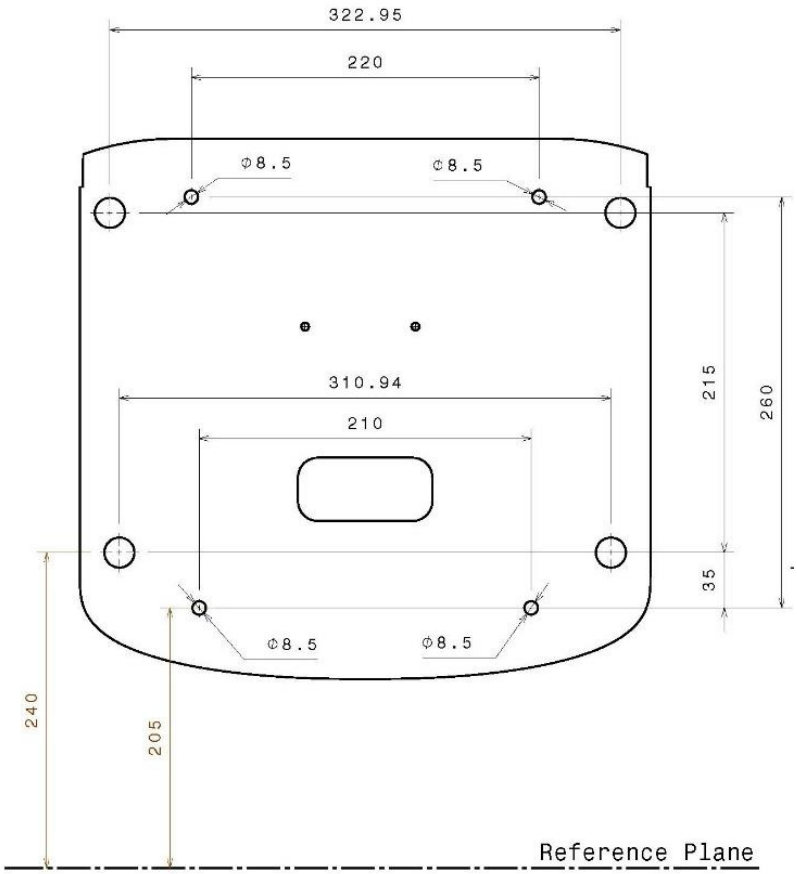

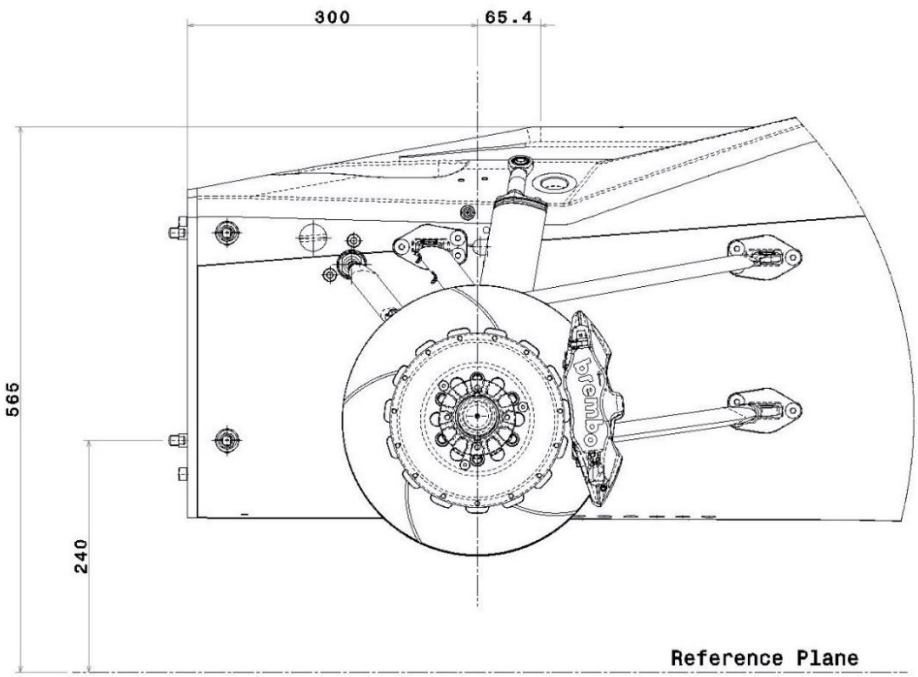

3.2.2 Rear references

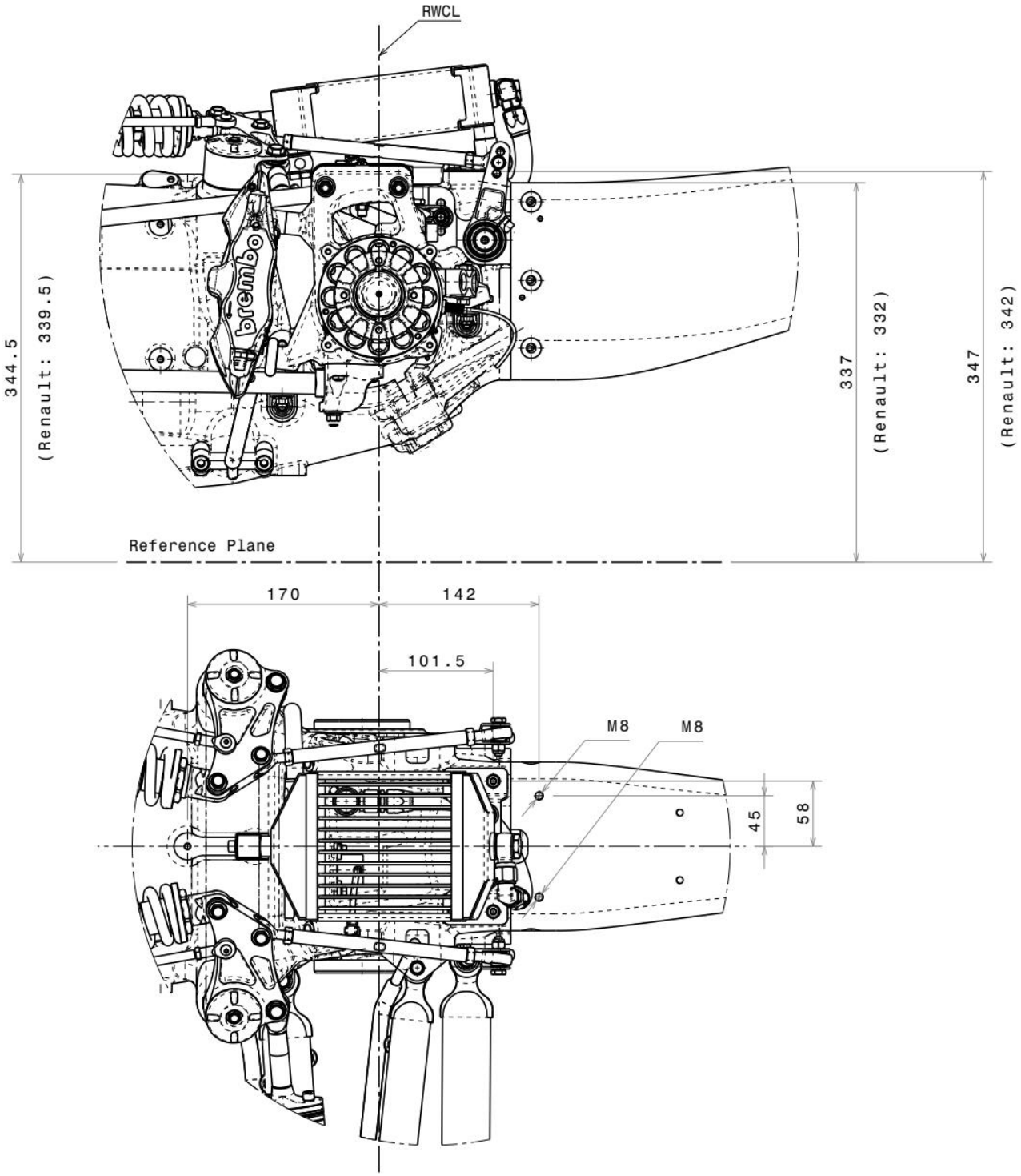

3.2.3 Wheel hub

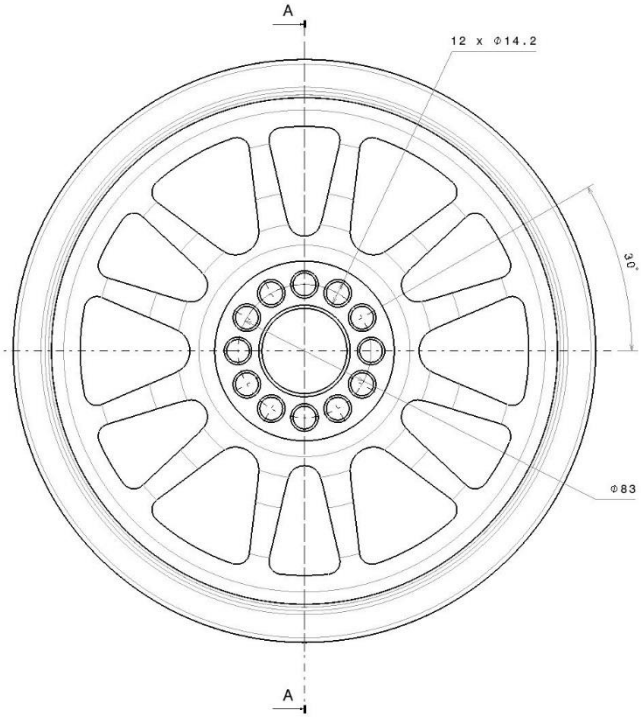

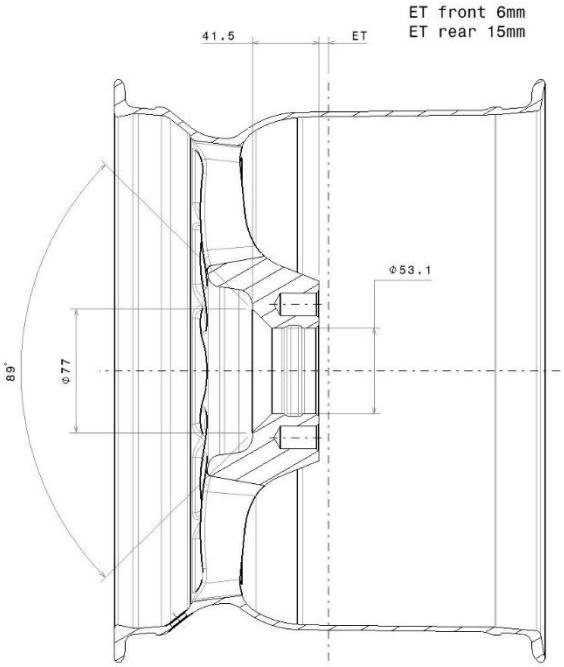

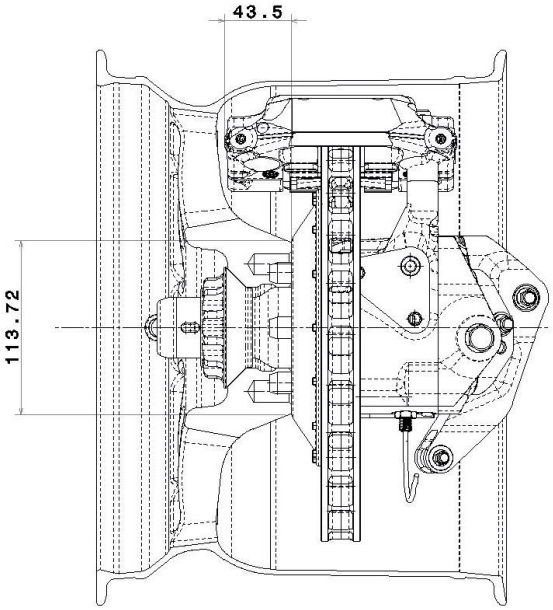

3.3 STANDARD SET-UP

Standard set-up sheet, refer to specific chapter for adjustment details:

3.3.1 Road Course Set-Up

		FRONT	REAR
GEOMETRY	Ride Height [mm]	20	35
	Camber [deg]	-3.5°	-2.2°
	Toe (Total) [deg]	+20’	0°
	Rear Suspension position		BE24
SUSPENSIONS	Springs [lb/in]	900	1300
	Spring preload [Turn]	0.5	0.5
	Anti-roll [mm]	22.5	12
	Anti-roll blade	M/M	S/S
	Damper bump [0 click: full closed]	4	4
	Damper reb [0 click: full closed]	4	4
AERO	Wing position	28° (B4)	10° (A5)
	Gurney [mm]	--	--
BRAKES	Master cylinder [mm]	19.05	20.64
GEAR/DIFF	Diff Ramp on power		65°
	Diff Ramp off power		70°
	Diff plates config		6
TIRES	Tire pressure (hot) [bar]	1.5	1.5

3.4 WEIGHT AND BALLAST

The T318 chassis has three locations for the ballast installation, the following drawings are a simple guideline:

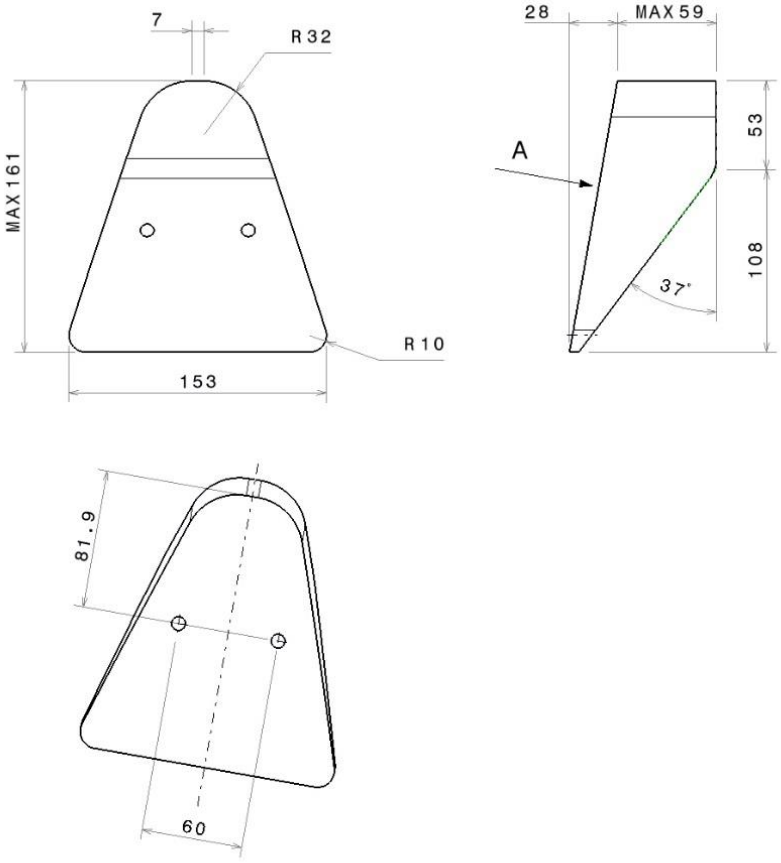
7
R 32
MAX 161
R 10
153
28
MAX 59
A
53
108
37°
81.9
60
Vista ausiliaria A

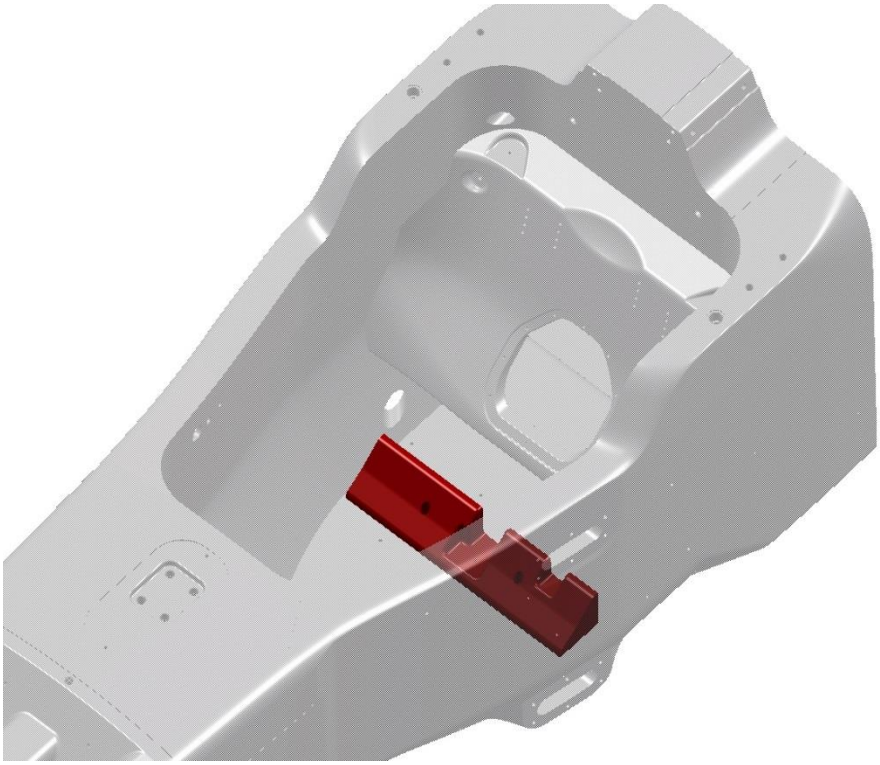

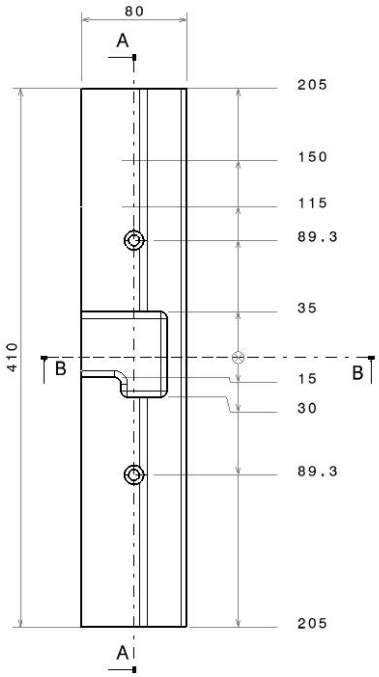

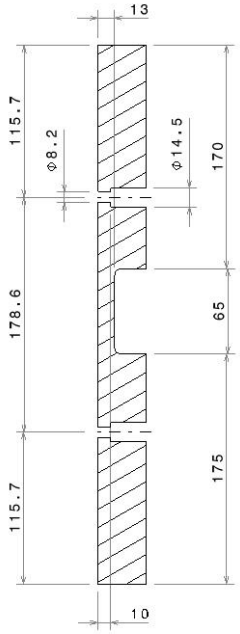

Sezione A-A

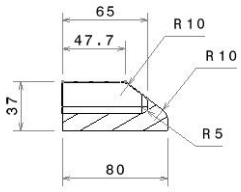

Vista in sezione B-B

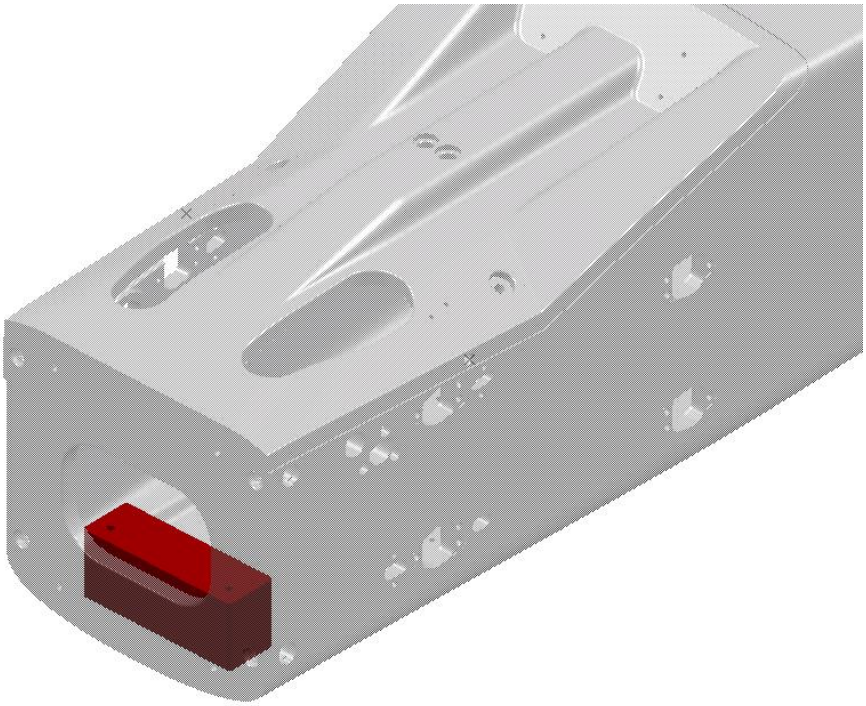

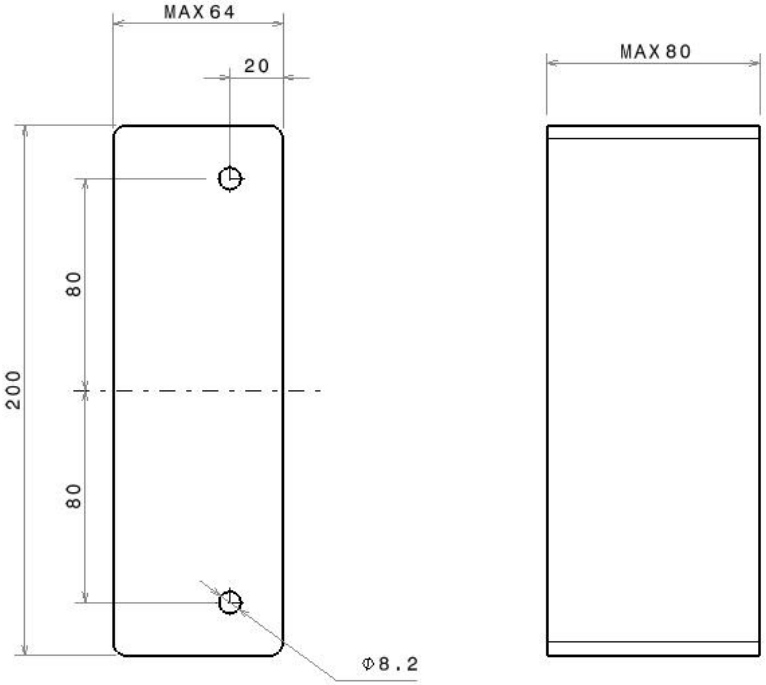
MAX 64
20
MAX 80
200
80
80
Φ8.2

3.5 Controls and Display

3.5.1 Cockpit Controls

- [1] Main power switch:
  - Position 1: master switch ON;
  - Position 2: Ignition ON
- [2] Starter button (YELLOW): starter motor is cranking (note that this button will crank the starter in any condition but the engine will fire up only if Ignition is ON);
- [3] Fire Extinguisher
- [4] Fire extinguisher status (green when armed)
- [5] ADR status
- [6] Communication Port (depending on ECU configuration)
- [7] ADR communication

All the switches are ON when HIGH.

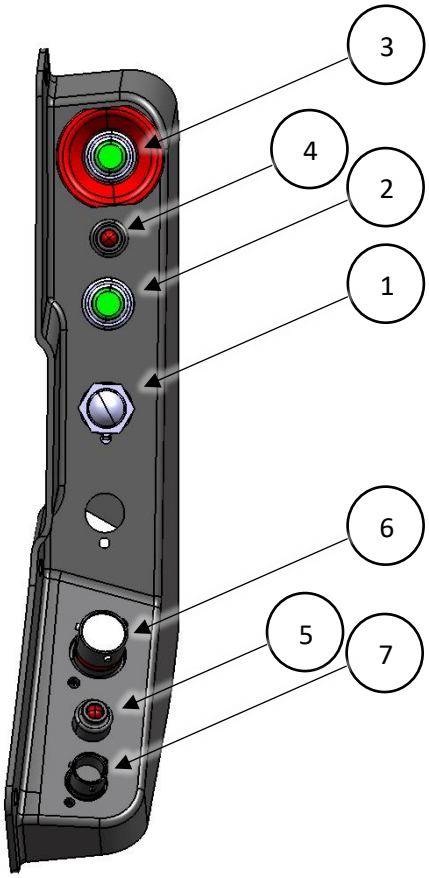

3.5.2 Steering Wheel Controls

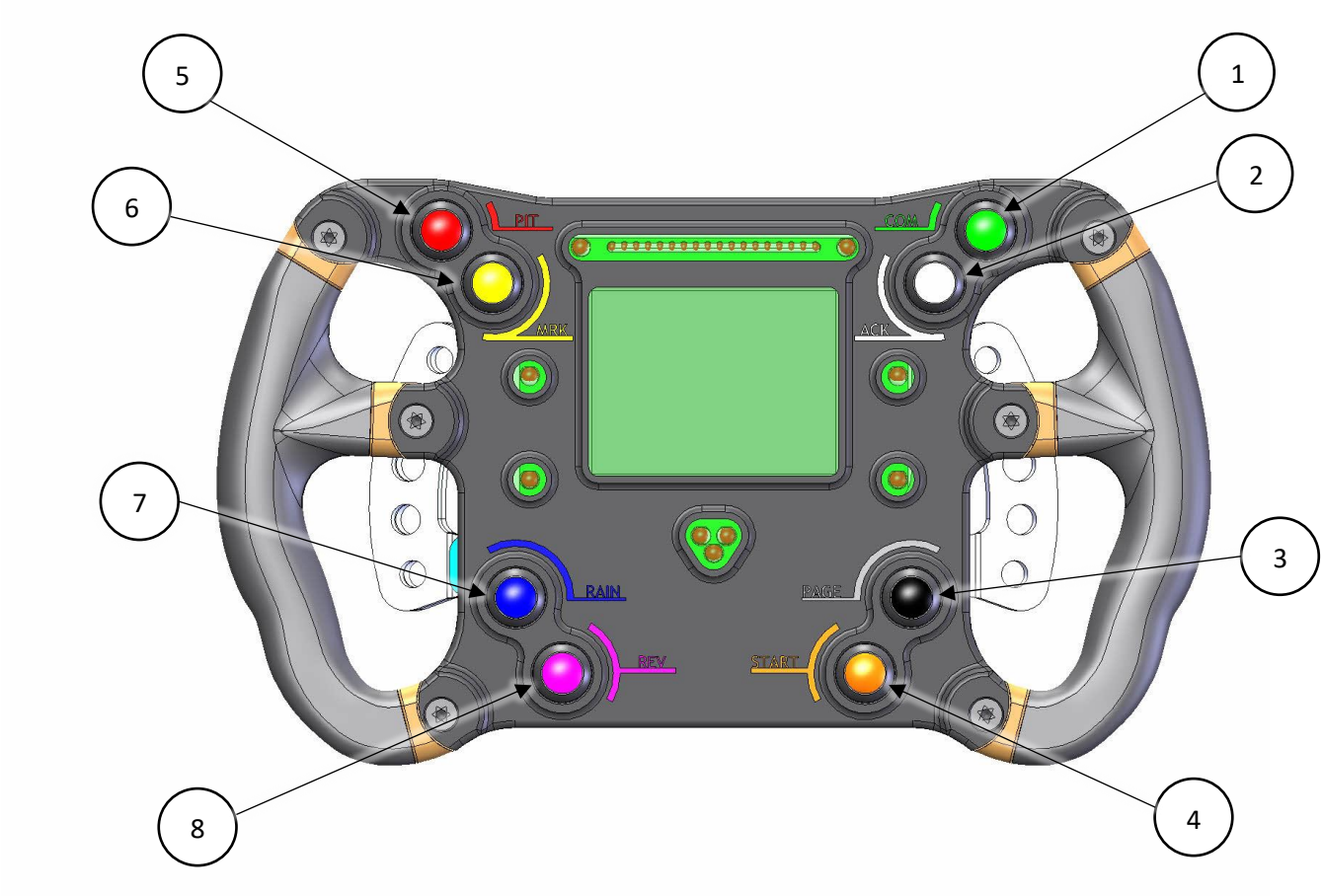

- Button [1]: **RADIO PTT**, the button signal is forwarded to the radio plug (see wiring diagram for pinout).
- Button [2]: **ACKNOWLEDGE**, when pressed all the alarms are skipped, critical alarms will persist. Long pressure will reset chassis sensors (damper position, steering angle, accelerometers).
- Button [3]: **Display PAGE**, a single short push will scroll pages, pushing the button for longer than 0.5 sec will return to the driver's page.
- Button [4]: **START**/KILL, only when IGN is ON this button act as a starter. When the engine is ON a long pressure will kill the engine.
- Button [5]: **PIT LIMITER**, when pushed the ECU will set engine rev limiter to control pit-limited speed (if wheel speeds are available).
- Button [6]: **MARK**, when pushed the ECU will register the input in the log file. Double click will activate fuel pump (for fuel drain purpose).
- Button [7]: **RAIN Light**, when pushed the ECU will activate the rain light, a blue flag will be active on the left bottom corner of the dash.
- Button [8]: **REVERSE**, when pushed the REVERSE gear is requested to the shifter, it only acts when the car is steady and clutch is pressed.

3.5.3 Steering Wheel Display

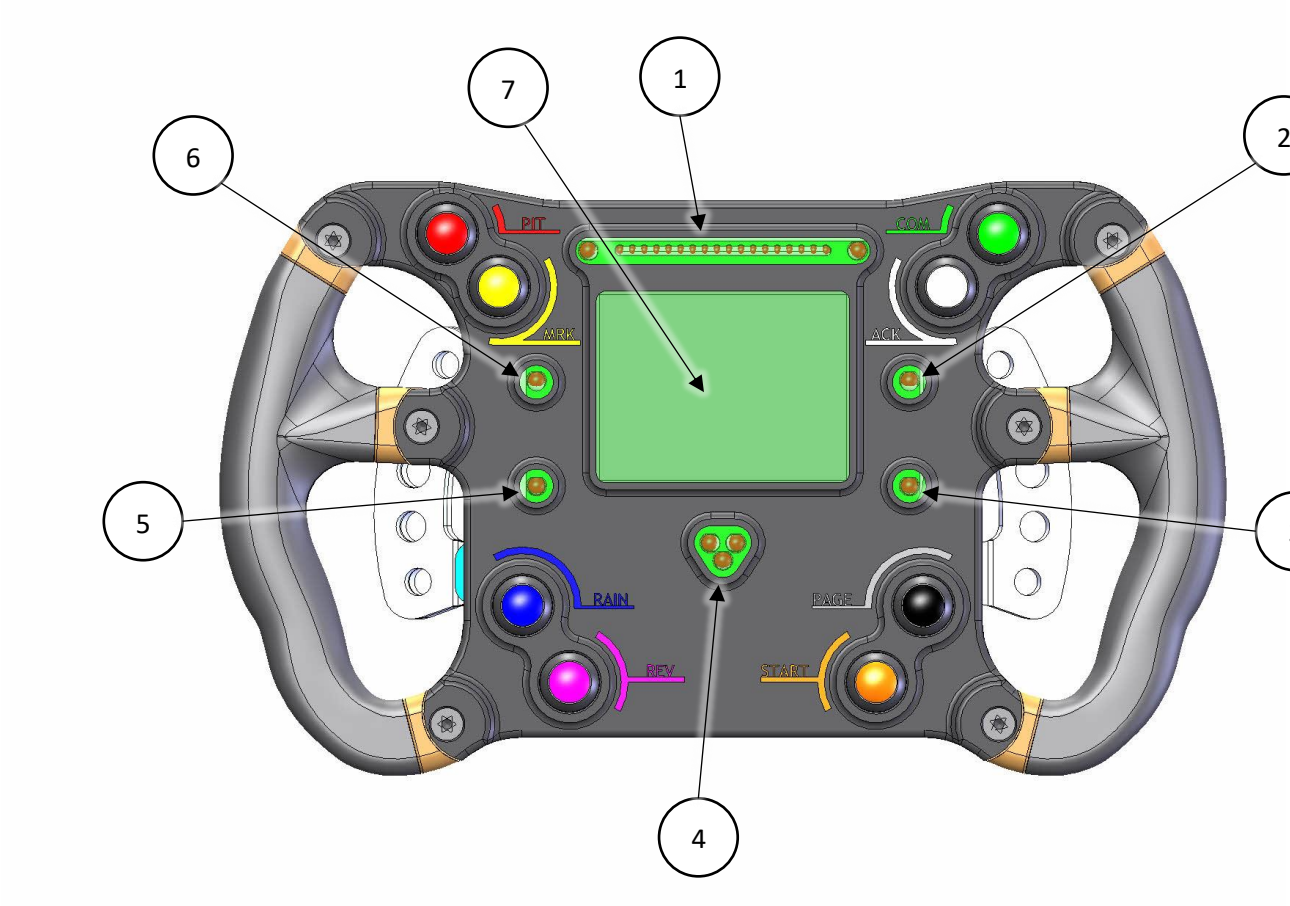

- LED strip #1: Shift lights
- LED strip #1b: Blue LED are ON when pit limiter is engaged
- Alarm [2]: LOW Oil Pressure
- Alarm [3]: Hight Oil Temperature
- Alarm [4]: 3x RED LED will blink when a general alarm is on, the display will highlight the relevant value and will show a text message
- Alarm [5]: Electric Fault
- Alarm [6]: HIGH Coolant Temperature

3.5.3.1 *Page #1: Driver page*

The first page of the display shows the following values:

- Water Temperature
- Engine Oil Pressure
- Battery Voltage
- Oil Temperature
- Warning boxes (see chapter for details)

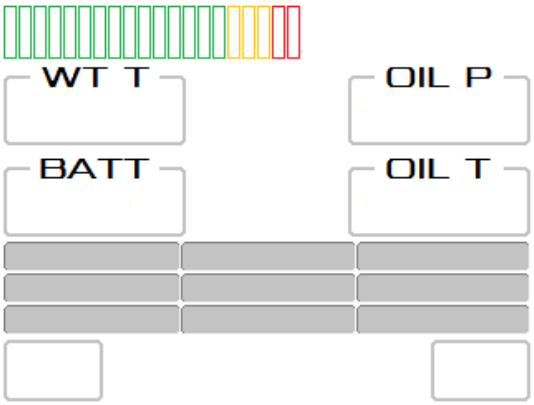

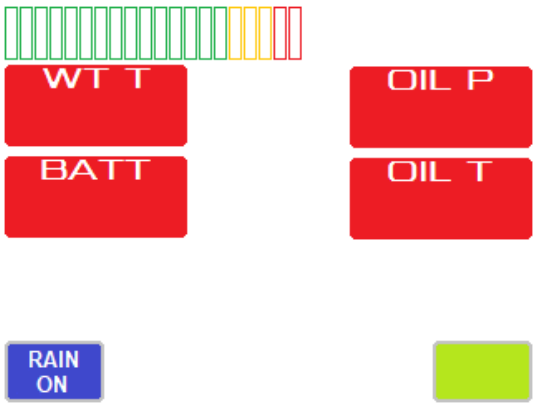

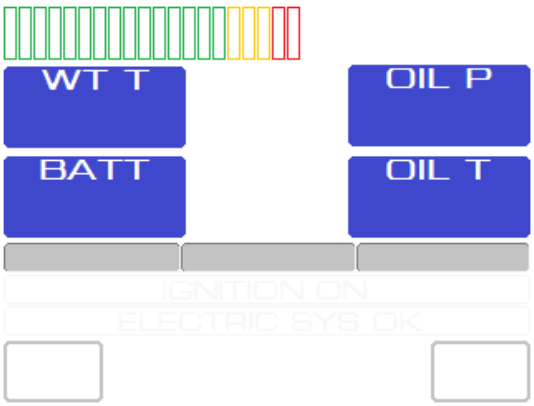

All the value boxes turn red when the value is over the maximum (alarm values are set by engine control), and blue when the value is below the minimum, all the alarm messages can be skipped pushing AKN button.

3.5.3.2 Page #2: Setting page

This page summarizes the parameters useful for the sensor setting.

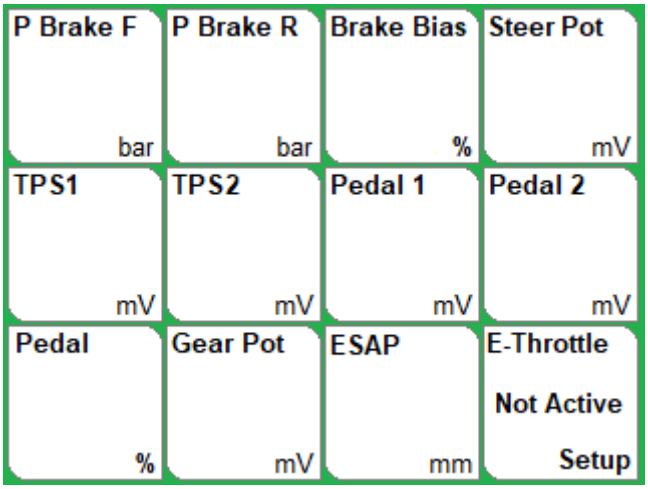

- P Brake F: Front brake pressure [bar]
- P Brake R: Rear brake pressure [bar]
- Brake Bias: percentage of front brake pressure over total brake pressure (Front+Rear) [%]
- Steer Pot: absolute position of steering potentiometer [mV], it should be set @ 2500mV when the steering wheel is straight
- TPS1 / TPS2: Throttle valve absolute position [mV]
- Pedal 1 / Pedal 2: Throttle pedal absolute position [mV], used to adjust pedal position before throttle calibration process.
- Pedal: percentage of Throttle pedal
- Gear Pot: gear barrel absolute position [mV], the value must be
    - Neutral: 930mV +/- 10mV
    - 1st gear: 1250mV +/- 10mV
- ESAP: absolute actuator position [mV], the value must be between 0 and +/-30mV when actuator is not operational.

- E-Throttle: throttle calibration messages
  - 

Push Throttle Pedal to full throttle
  - 

Release Throttle Pedal to rest position
  - 

Wait for the Throttle Valve learning
  - 

Throttle calibration process completed successfully
  - 

Throttle calibration process NOT completed
  - **Power cycle the car**: switch OFF and then ON the electric system

3.5.3.3 *Page #3: Logger page*

This page contains the channels logged by the data systems and low to check the zero procedure.
all the channels are set to zero when ACK button is pressed longer than 1 second.

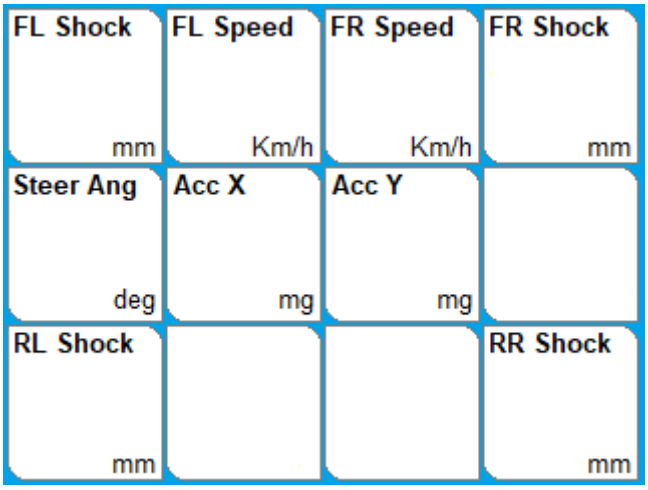

- FL Shock: Front Left damper position [mm]
- FR Shock: Front Right damper position [mm]
- RL Shock: Rear Left damper position [mm]
- RR Shock: Rear Right damper position [mm]
- FL Speed: Front Left wheel speed [km/h]
- FR Speed: Front Right wheel speed [km/h]
- Steer Angle: Steering wheel position [deg]
- Acc X: longitudinal acceleration [mg]
- Acc Y: lateral acceleration [mg]

All the listed channels except wheel speeds are set to zero when ACK button is pressed longer than 1 second.

3.5.3.4 Page #4: Electric Power Distribution

This page shows the power system of the car, each box contains the current drained by the relevant line, the boxes turn RED if the powerbox shut down the relevant line (i.e. short-circuit detected)

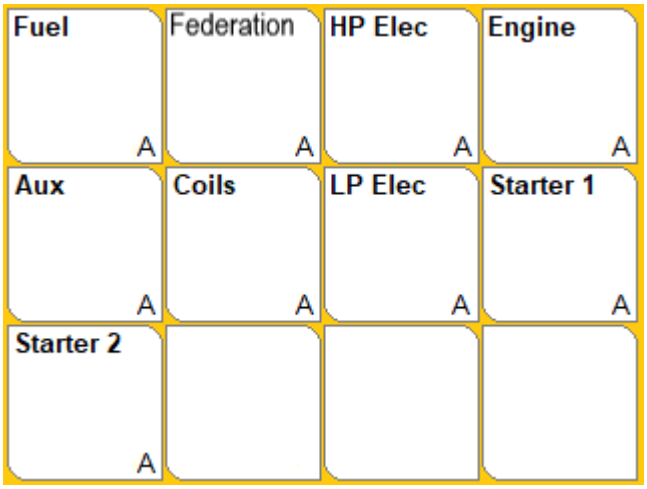

Refer to powerbox chapter (12.4) for line details.

3.5.3.5 Page #5: Engine warmup

This page contains the engine parameters, it could be useful while starting and warming the engine.

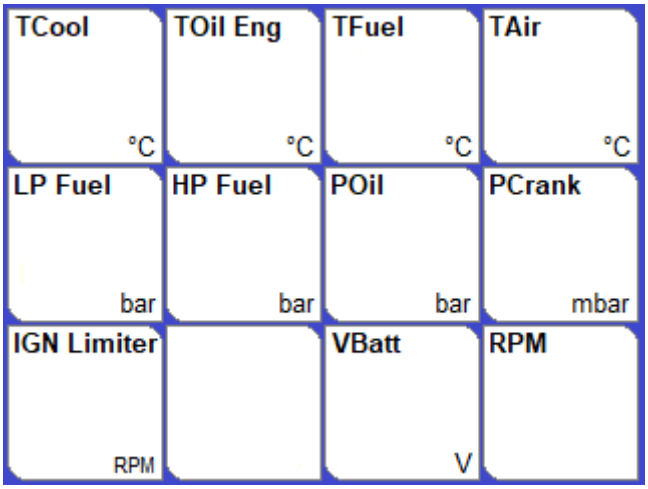

- TCool: Engine Coolant Temperature [°C]
- Toil Engine: Engine Oil Temperature [°C]
- TFuel: NU
- TAir: Air Temperature[°C]
- LPFuel: Low pressure Fuel [bar] (if available from ECU)
- HPFuel: Low pressure Fuel [bar]
- Poil: Engine Oil Pressure [bar]
- PCranck: Engine Case Pressure [mbar] (if available from ECU)
- IGN Limiter: Ignition Limiter threshold [RPM] (if available from ECU)
- VBatt: Battery Voltage [V]
- RPM: Engine revs [RPM]

3.5.3.6 *Page #6: Gearbox page*

This page contains the gearbox parameters, it could be useful while testing and warming the gearbox.

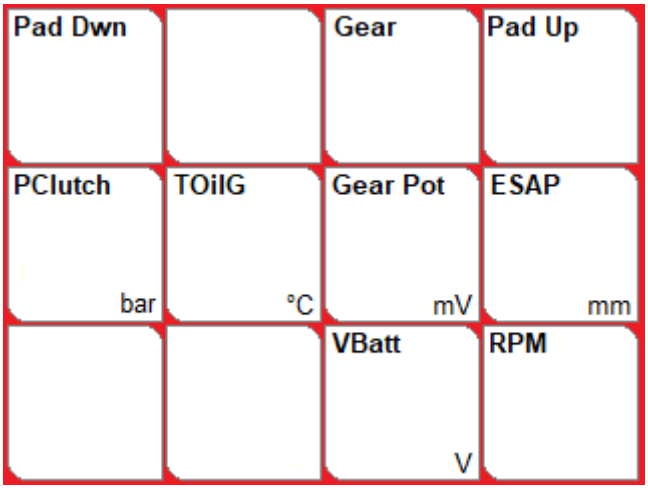

- Pad Dwn: Box turns green when paddle input is active
- Pad UP: Box turns green when paddle input is active
- Gear: Gear number [1 to 6]
- PClutch: Clutch Pressure [bar]
- ToilG: Gearbox Oil Temperature [°C] (if available)
- Gear Pot: Gear barrel absolute position [mV]
- ESAP: absolute actuator position [mV]
- VBatt: Battery Voltage [V]
- RPM: Engine revs [RPM]

3.6 DRIVER INSTALLATION

3.6.1 Steering Wheel Position

The spacers ① allow the adjustment of the steering wheel depth, each spacer add 13mm and can be stack up to two.

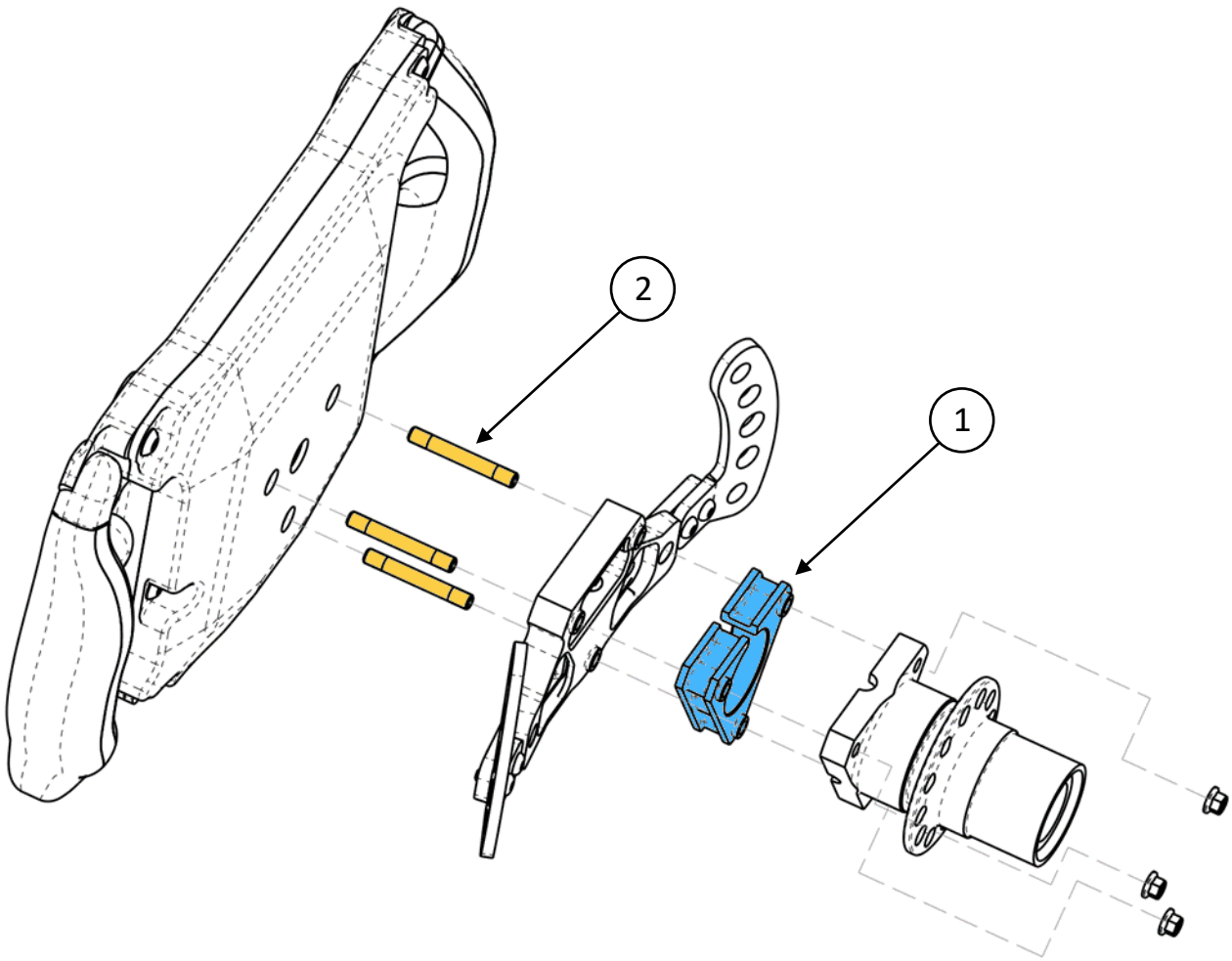

Different stack of ① requires different studs ② length. Check the Spare parts Catalogue for the options.

3.6.2 Pedals

The three pedals may be placed independently, all of these are “standalone”.

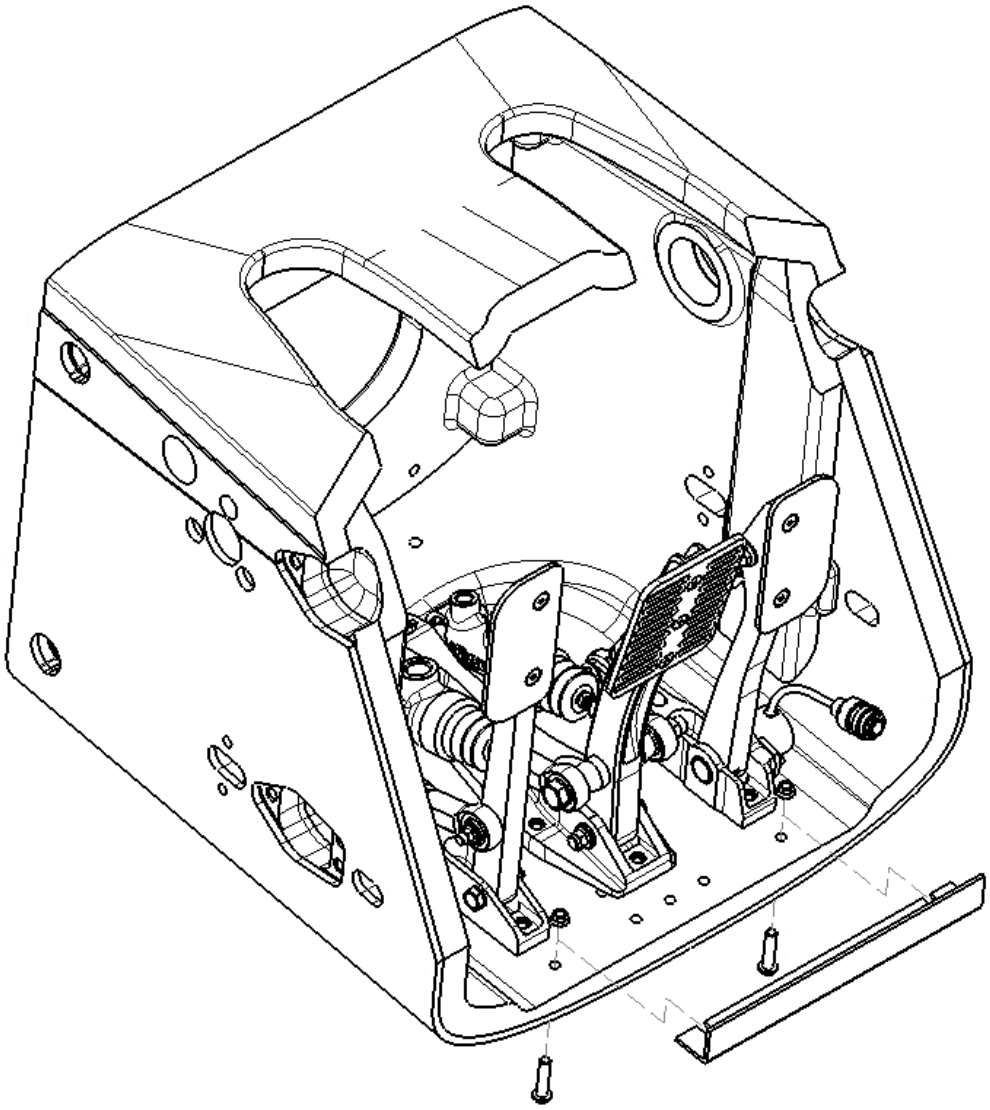

3.6.2.1 Brake pedal

Rest position adjustment: operating on the rod end ① the pedal plate can be moved

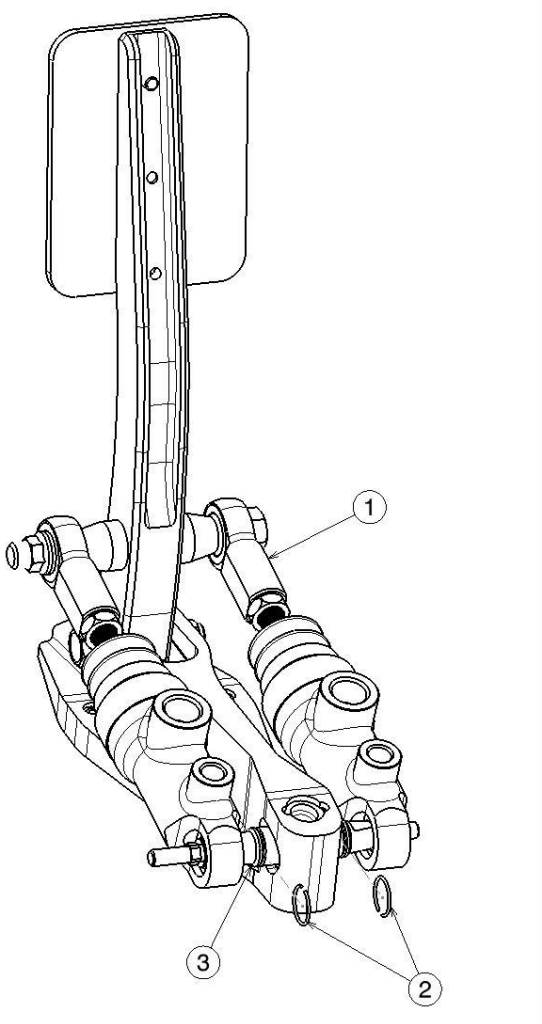

It is recommended to inspect and set the brake balance ③ in order that the adjustment stops ② are correctly in position and far from their contact.

It is recommended to replace the balance bar and the pedal base every 10’000 km.

3.6.2.2 Throttle pedal

Rest position adjustment: operating on the bottom rod ends the pedal plate can be moved.

Stroke/full stroke: the stroke and the final position can be adjusted adding or removing shims ① on the damper shaft.

The throttle potentiometer has to be checked after every pedal adjustment in order to respect the calibration thresholds.
After every operation on the pedal the throttle learning must be repeated.

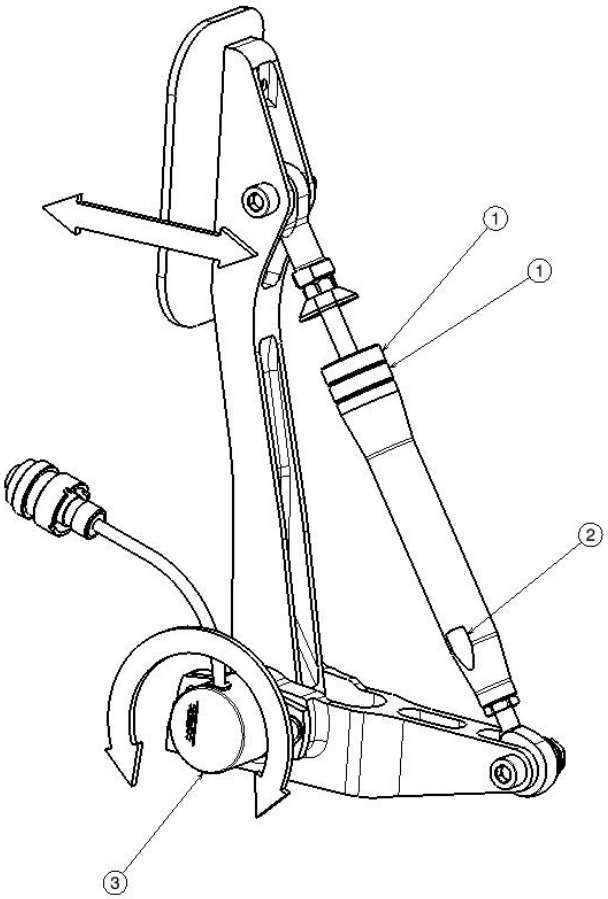

3.6.2.3 Clutch pedal

Rest position adjustment: operating on the rod end the pedal plate can be moved.

Stroke/full stroke: the stroke and the final position can be adjusted operating on the bush ②, counter nut ① must then be locked.

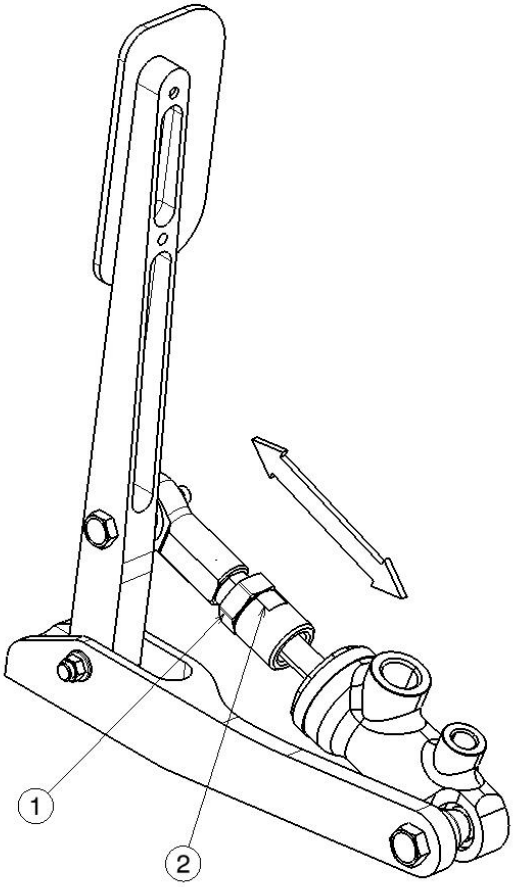

The standard master cylinder for clutch actuation is a 5/8”, here below a guideline of theoretical strokes to operate the clutch mechanism:

	Master cylinder displacement [mm]	**Slave cylinder displacement [mm]**	**Pedal “top” displacement [mm]**
TM Clutch	12	2.5	45
Sachs Clutch (max)	20	4.0	72

3.6.2.4 Heel rest

A heel rest can be bolted on the unused holes, here below a generic guideline.

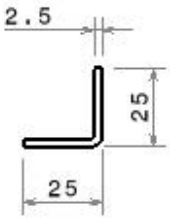

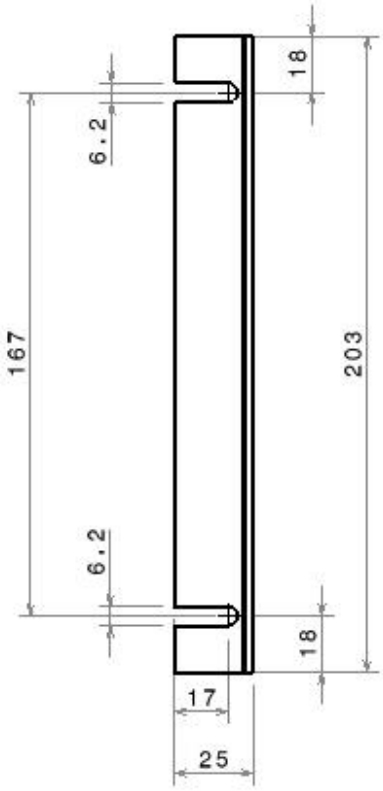

3.6.3 Brake Bias

The brake bias knob is located on the right-hand side of the driver seat.
Rotating clockwise will shift the brake balance towards front: with the standard master cylinders (Front = 19.05 mm, Rear = 20.68 mm) 1 complete turn give a +1.5% front balance.

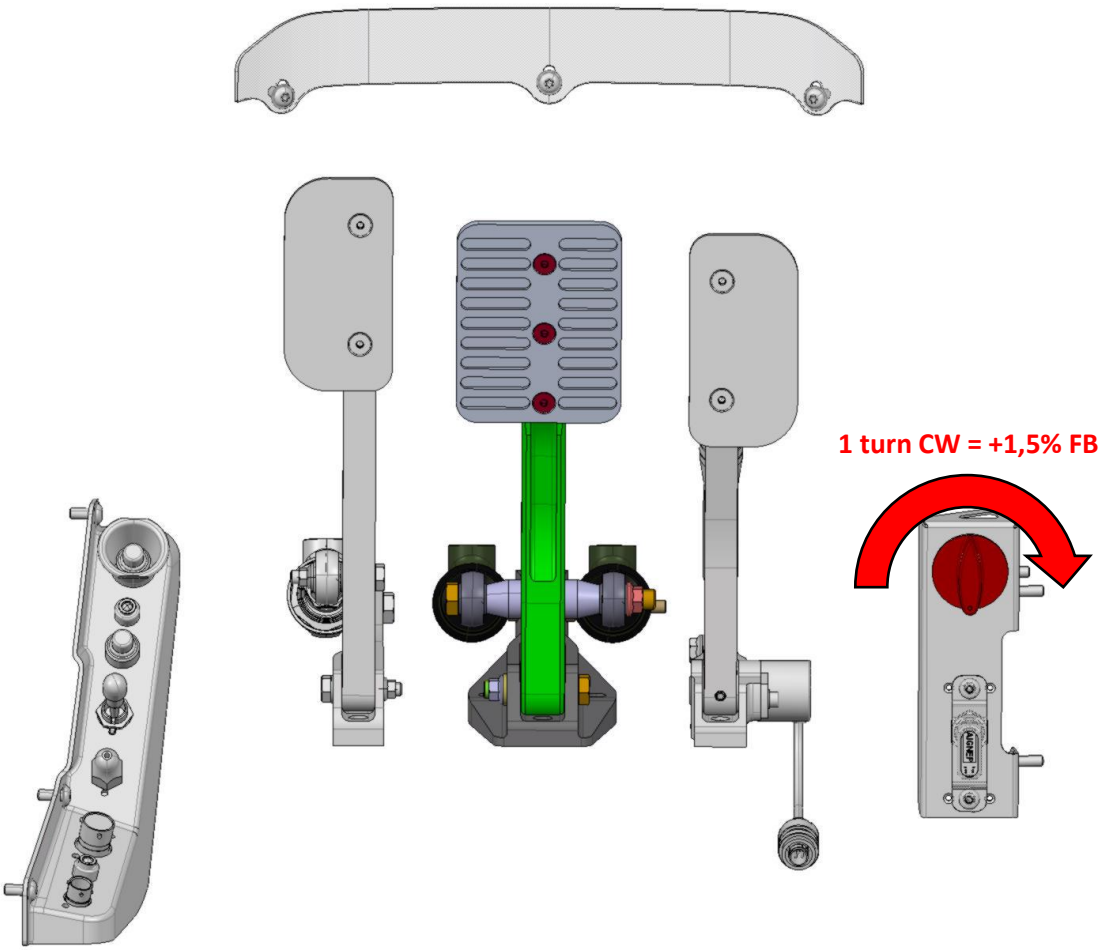

Brake pressure (Front and Rear) and Brake Bias, defined as $PBrake_{FRONT}\% = \frac{PBrake_{FRONT}}{PBrake_{FRONT}+PBrake_{REAR}}$, can be checked on page 2 of the steering wheel.

4 AERODYNAMIC

4.1 GENERAL NOTES

Downforce [SCz]: total downforce generated by the car, excluding wheel lift.
Drag [SCx]: total drag (including wheels) of the car resolved to the tire contact point.
Balance %F: percentage of the total downforce acting at the front contact patches.

All forces are reported as percentage from the datum point measurements (see chapter 4.4).

Aerodynamic loading is a function of atmospheric conditions:

- 5°C increase in ambient temperature from ISA conditions result in a 2.7% reduction in aerodynamic forces.
- 10 mbar increase in air pressure from ISA conditions results in a 1% increase in aerodynamic forces.
- 50% increase in humidity from ISA conditions results in a 0.3% reduction in aerodynamic loading.

4.2 Front Wing Setting

Front flap angle in the following tables is the angle between the tangent on the upper side of the front flap assembly (both flaps on, without gurney flap, measured on the endplate side) and the reference plane.
As reference line for the tangent on the flap, the straight line on the upper side of the flap fishplate can be used.

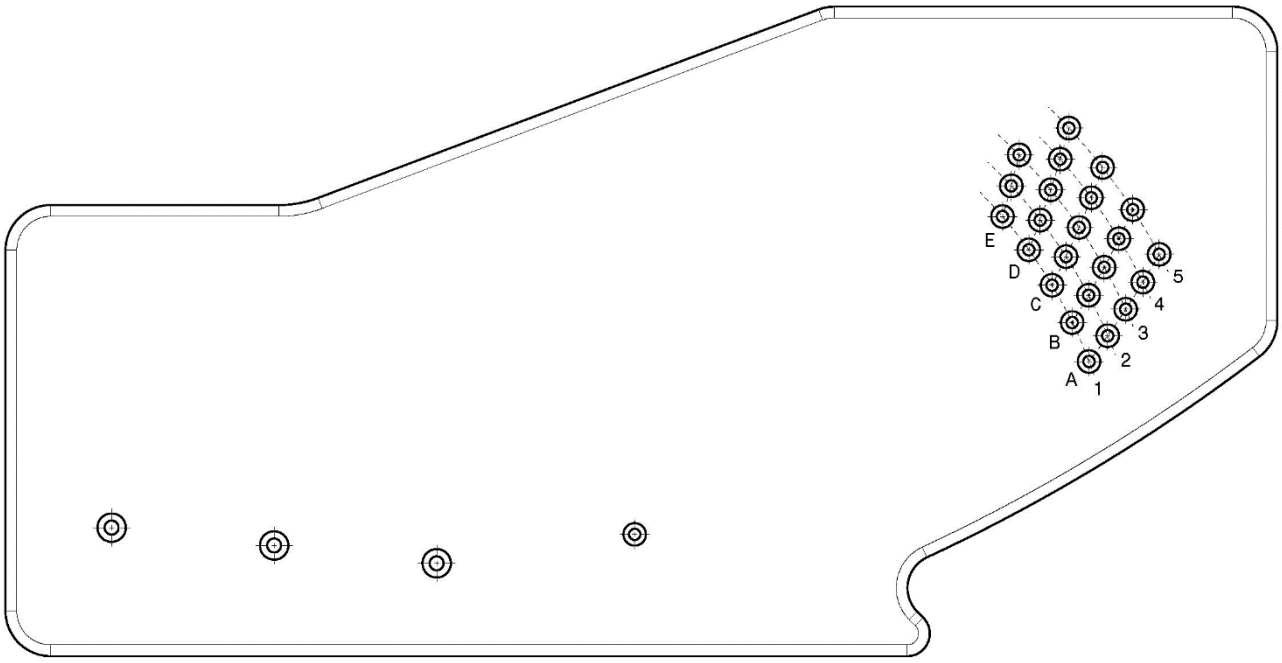

	A	B	C	D	E
1	20°	25°	30°	35°	40°
2	21°	26°	31°	36°	41°
3	22°	27°	32°	37°	42°
4	23°	28°	33°	38°	
5	24°	29°	34°	39°	

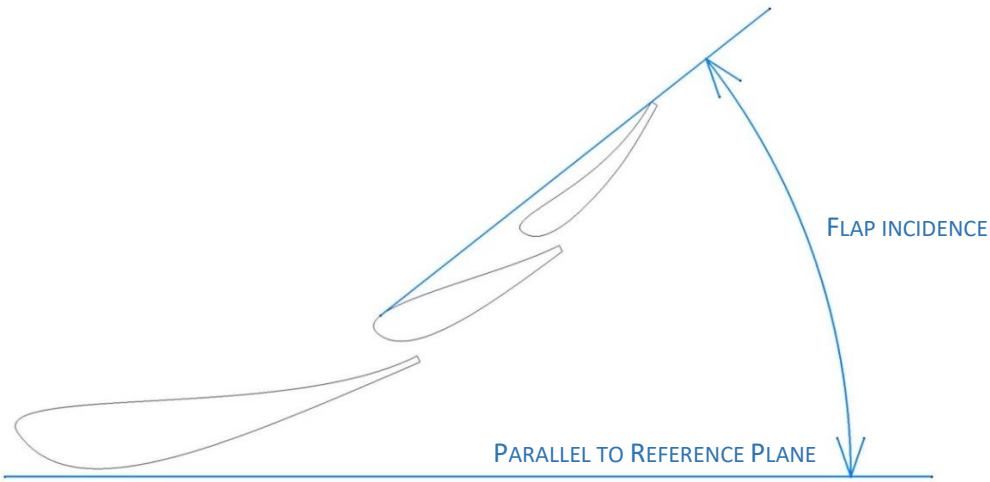

TATUUS recall that, by FIA Technical Regulation, the use of a gurney flap on the front wing 500mm central part (FIA standard profile) is currently not allowed.

4.3 Rear Wing Setting

Rear flap angle in the following tables is the angle between the tangent on the upper side of the rear flap (without gurney flap) and the reference plane:

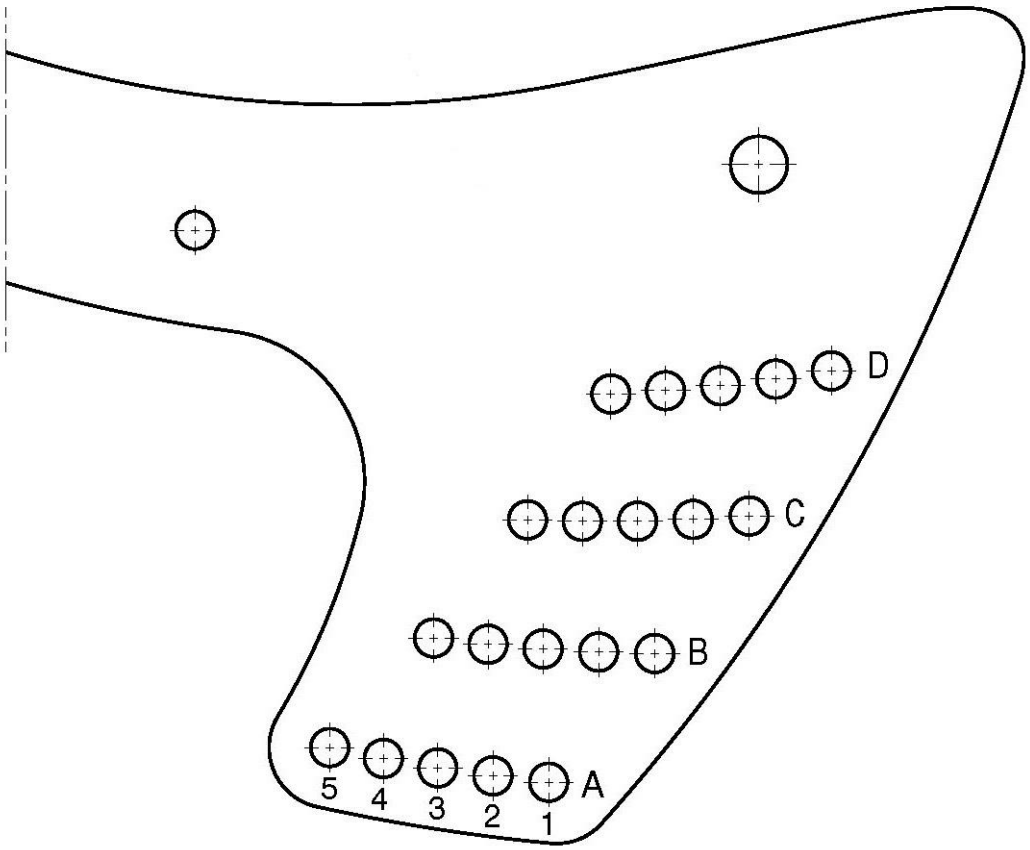

	A	B	C	D
1	6°	11°	16°	21°
2	7°	12°	17°	22°
3	8°	13°	18°	23°
4	9°	14°	19°	24°
5	10°	15°	20°	25°

TATUUS recall that, by FIA Technical Regulation, the use of gurney flaps on any of the rear aerofoils is currently not allowed.

4.4 Aerodynamic Reference Setup

Aerodynamic baseline setup (datum):

Front Ride Height:	10 mm
Rear Ride Height:	25 mm
Front Wing Assy angle:	STD (fixed)
Front Flaps angle: (both flaps on, no gurney flap)	30° (C1)
Rear Wing Top Assembly angle:	10° (A5)

Front Ride Height (FRH) is the distance between the ground and a point intersection of the Reference Plane (5mm above the lower surface of the skid block when new, plane between the skid block and the wooden plank) with a plane orthogonal to both the Reference Plane and the car symmetry plane passing on the Front Wheel Centre Line.
Rear Ride Height (RRH) is the distance between the ground and a point intersection of the Reference Plane (5mm above the lower surface of the skid block when new, plane between the skid block and the wooden plank) with a plane orthogonal to both the Reference Plane and the car symmetry plane passing on the Rear Wheel Centre Line.

The scan is referred to a car with the updated front wing pillars (pn. 2403037) and with Sidepod Louvered Panels (pn. 2402077/078) installed with no blanking.

At the datum point aerodynamic coefficients will be:

$$SC_Z = 100\%$$

$$SC_x = 100\%$$

$$\%F = \frac{SC_{Z_{FRONT}}}{SC_{Z_{TOT}}} = 40\%$$

4.5 Ride Height Sensitivity

The Ride Height Sensitivity is referred to a configuration with both the front flaps on, without gurney flap installed.

The following tables report the percentage changes from the datum point resulting from the change of the ride heights (FRH = Front Ride Height / RRH = Rear Ride Height):

%F	RRH →																																
	15	16	17	18	19	20	21	22	23	24	25	26	27	28	29	30	31	32	33	34	35	36	37	38	39	40	41	42	43	44	45
FRH ↓ 5	-0.4%	-0.2%	+0.0%	+0.2%	+0.4%	+0.6%	+0.8%	+1.0%	+1.2%	+1.4%	+1.6%	+1.8%	+2.0%	+2.2%	+2.4%	+2.6%	+2.8%	+3.0%	+3.2%	+3.4%	+3.6%	+3.8%	+4.0%	+4.2%	+4.4%	+4.6%	+4.8%	+5.0%	+5.2%	+5.4%	+5.6%
6	-0.7%	-0.5%	-0.3%	-0.1%	+0.1%	+0.3%	+0.5%	+0.7%	+0.9%	+1.1%	+1.3%	+1.5%	+1.7%	+1.9%	+2.1%	+2.3%	+2.5%	+2.7%	+2.9%	+3.1%	+3.3%	+3.5%	+3.7%	+3.9%	+4.1%	+4.3%	+4.5%	+4.7%	+4.9%	+5.1%	+5.3%
7	-1.0%	-0.8%	-0.6%	-0.4%	-0.2%	-0.0%	+0.2%	+0.4%	+0.6%	+0.8%	+1.0%	+1.2%	+1.4%	+1.6%	+1.8%	+2.0%	+2.2%	+2.4%	+2.6%	+2.7%	+2.9%	+3.1%	+3.3%	+3.5%	+3.7%	+3.9%	+4.1%	+4.3%	+4.5%	+4.7%	+4.9%
8	-1.3%	-1.1%	-0.9%	-0.7%	-0.5%	-0.3%	-0.1%	+0.1%	+0.3%	+0.5%	+0.7%	+0.8%	+1.0%	+1.2%	+1.4%	+1.6%	+1.8%	+2.0%	+2.2%	+2.4%	+2.6%	+2.8%	+3.0%	+3.2%	+3.4%	+3.6%	+3.8%	+4.0%	+4.2%	+4.4%	+4.6%
9	-1.6%	-1.4%	-1.2%	-1.0%	-0.8%	-0.7%	-0.5%	-0.3%	-0.1%	+0.1%	+0.3%	+0.5%	+0.7%	+0.9%	+1.1%	+1.3%	+1.5%	+1.7%	+1.9%	+2.1%	+2.3%	+2.5%	+2.7%	+2.9%	+3.1%	+3.3%	+3.4%	+3.6%	+3.8%	+4.0%	+4.2%
10	-1.9%	-1.7%	-1.6%	-1.4%	-1.2%	-1.0%	-0.8%	-0.6%	-0.4%	-0.2%	0.0%	+0.2%	+0.4%	+0.6%	+0.8%	+1.0%	+1.2%	+1.4%	+1.6%	+1.7%	+1.9%	+2.1%	+2.3%	+2.5%	+2.7%	+2.9%	+3.1%	+3.3%	+3.5%	+3.7%	+3.9%
11	-2.3%	-2.1%	-1.9%	-1.7%	-1.5%	-1.3%	-1.1%	-0.9%	-0.7%	-0.5%	-0.3%	-0.1%	+0.1%	+0.3%	+0.4%	+0.6%	+0.8%	+1.0%	+1.2%	+1.4%	+1.6%	+1.8%	+2.0%	+2.2%	+2.4%	+2.6%	+2.8%	+3.0%	+3.1%	+3.3%	+3.5%
12	-2.6%	-2.4%	-2.2%	-2.0%	-1.8%	-1.6%	-1.4%	-1.2%	-1.0%	-0.8%	-0.7%	-0.5%	-0.3%	-0.1%	+0.1%	+0.3%	+0.5%	+0.7%	+0.9%	+1.1%	+1.3%	+1.5%	+1.7%	+1.8%	+2.0%	+2.2%	+2.4%	+2.6%	+2.8%	+3.0%	+3.2%
13	-2.9%	-2.7%	-2.5%	-2.3%	-2.1%	-1.9%	-1.7%	-1.5%	-1.4%	-1.2%	-1.0%	-0.8%	-0.6%	-0.4%	-0.2%	-0.0%	+0.2%	+0.4%	+0.6%	+0.7%	+0.9%	+1.1%	+1.3%	+1.5%	+1.7%	+1.9%	+2.1%	+2.3%	+2.5%	+2.7%	+2.8%
14	-3.2%	-3.0%	-2.8%	-2.6%	-2.4%	-2.3%	-2.1%	-1.9%	-1.7%	-1.5%	-1.3%	-1.1%	-0.9%	-0.7%	-0.5%	-0.4%	-0.2%	+0.0%	+0.2%	+0.4%	+0.6%	+0.8%	+1.0%	+1.2%	+1.4%	+1.6%	+1.7%	+1.9%	+2.1%	+2.3%	+2.5%
15	-3.5%	-3.3%	-3.1%	-2.9%	-2.8%	-2.6%	-2.4%	-2.2%	-2.0%	-1.8%	-1.6%	-1.4%	-1.2%	-1.1%	-0.9%	-0.7%	-0.5%	-0.3%	-0.1%	+0.1%	+0.3%	+0.5%	+0.6%	+0.8%	+1.0%	+1.2%	+1.4%	+1.6%	+1.8%	+2.0%	+2.2%
16		-3.6%	-3.5%	-3.3%	-3.1%	-2.9%	-2.7%	-2.5%	-2.3%	-2.1%	-2.0%	-1.8%	-1.6%	-1.4%	-1.2%	-1.0%	-0.8%	-0.6%	-0.4%	-0.3%	-0.1%	+0.1%	+0.3%	+0.5%	+0.7%	+0.9%	+1.1%	+1.2%	+1.4%	+1.6%	+1.8%
17			-3.8%	-3.6%	-3.4%	-3.2%	-3.0%	-2.8%	-2.6%	-2.5%	-2.3%	-2.1%	-1.9%	-1.7%	-1.5%	-1.3%	-1.2%	-1.0%	-0.8%	-0.6%	-0.4%	-0.2%	-0.0%	+0.2%	+0.3%	+0.5%	+0.7%	+0.9%	+1.1%	+1.3%	+1.5%
18				-3.9%	-3.7%	-3.5%	-3.3%	-3.2%	-3.0%	-2.8%	-2.6%	-2.4%	-2.2%	-2.0%	-1.9%	-1.7%	-1.5%	-1.3%	-1.1%	-0.9%	-0.7%	-0.6%	-0.4%	-0.2%	+0.0%	+0.2%	+0.4%	+0.6%	+0.7%	+0.9%	+1.1%
19					-4.0%	-3.9%	-3.7%	-3.5%	-3.3%	-3.1%	-2.9%	-2.7%	-2.6%	-2.4%	-2.2%	-2.0%	-1.8%	-1.6%	-1.4%	-1.3%	-1.1%	-0.9%	-0.7%	-0.5%	-0.3%	-0.2%	+0.0%	+0.2%	+0.4%	+0.6%	+0.8%
20						-4.2%	-4.0%	-3.8%	-3.6%	-3.4%	-3.3%	-3.1%	-2.9%	-2.7%	-2.5%	-2.3%	-2.1%	-2.0%	-1.8%	-1.6%	-1.4%	-1.2%	-1.0%	-0.9%	-0.7%	-0.5%	-0.3%	-0.1%	+0.1%	+0.2%	+0.4%
21							-4.3%	-4.1%	-3.9%	-3.8%	-3.6%	-3.4%	-3.2%	-3.0%	-2.8%	-2.7%	-2.5%	-2.3%	-2.1%	-1.9%	-1.7%	-1.6%	-1.4%	-1.2%	-1.0%	-0.8%	-0.6%	-0.5%	-0.3%	-0.1%	+0.1%
22								-4.4%	-4.3%	-4.1%	-3.9%	-3.7%	-3.5%	-3.4%	-3.2%	-3.0%	-2.8%	-2.6%	-2.4%	-2.3%	-2.1%	-1.9%	-1.7%	-1.5%	-1.4%	-1.2%	-1.0%	-0.8%	-0.6%	-0.4%	-0.3%
23									-4.6%	-4.4%	-4.2%	-4.0%	-3.9%	-3.7%	-3.5%	-3.3%	-3.1%	-3.0%	-2.8%	-2.6%	-2.4%	-2.2%	-2.1%	-1.9%	-1.7%	-1.5%	-1.3%	-1.1%	-1.0%	-0.8%	-0.6%
24										-4.7%	-4.6%	-4.4%	-4.2%	-4.0%	-3.8%	-3.7%	-3.5%	-3.3%	-3.1%	-2.9%	-2.8%	-2.6%	-2.4%	-2.2%	-2.0%	-1.9%	-1.7%	-1.5%	-1.3%	-1.1%	-1.0%
25											-4.9%	-4.7%	-4.5%	-4.3%	-4.2%	-4.0%	-3.8%	-3.6%	-3.4%	-3.3%	-3.1%	-2.9%	-2.7%	-2.5%	-2.4%	-2.2%	-2.0%	-1.8%	-1.7%	-1.5%	-1.3%

SCz	RRH →																															
	15	16	17	18	19	20	21	22	23	24	25	26	27	28	29	30	31	32	33	34	35	36	37	38	39	40	41	42	43	44	45
FRH ↓ 5	103.2%	103.0%	102.9%	102.8%	102.7%	102.6%	102.5%	102.4%	102.3%	102.2%	102.1%	102.0%	101.9%	101.7%	101.6%	101.5%	101.4%	101.3%	101.2%	101.1%	101.0%	100.9%	100.8%	100.7%	100.6%	100.4%	100.3%	100.2%	100.1%	100.0%	99.9%
6	102.7%	102.6%	102.5%	102.4%	102.3%	102.2%	102.1%	102.0%	101.9%	101.8%	101.7%	101.6%	101.4%	101.3%	101.2%	101.1%	101.0%	100.9%	100.8%	100.7%	100.6%	100.5%	100.4%	100.3%	100.2%	100.1%	100.0%	99.9%	99.8%	99.7%	99.6%
7	102.2%	102.1%	102.0%	101.9%	101.8%	101.7%	101.6%	101.5%	101.4%	101.3%	101.2%	101.1%	101.0%	100.9%	100.8%	100.7%	100.6%	100.5%	100.4%	100.3%	100.2%	100.1%	100.0%	99.9%	99.8%	99.7%	99.6%	99.5%	99.4%	99.3%	99.2%
8	101.8%	101.7%	101.6%	101.5%	101.4%	101.3%	101.2%	101.1%	101.0%	100.9%	100.8%	100.7%	100.6%	100.5%	100.4%	100.3%	100.2%	100.2%	100.1%	100.0%	99.9%	99.8%	99.7%	99.6%	99.5%	99.4%	99.3%	99.2%	99.1%	99.0%	98.9%
9	101.3%	101.2%	101.2%	101.1%	101.0%	100.9%	100.8%	100.7%	100.6%	100.5%	100.4%	100.3%	100.2%	100.1%	100.0%	100.0%	99.9%	99.8%	99.7%	99.6%	99.5%	99.4%	99.3%	99.2%	99.1%	99.0%	98.9%	98.8%	98.8%	98.7%	98.6%
10	100.9%	100.8%	100.7%	100.6%	100.5%	100.4%	100.4%	100.3%	100.2%	100.1%	100.0%	99.9%	99.8%	99.7%	99.6%	99.6%	99.5%	99.4%	99.3%	99.2%	99.1%	99.0%	98.9%	98.9%	98.8%	98.7%	98.6%	98.5%	98.4%	98.3%	98.2%
11	100.4%	100.3%	100.3%	100.2%	100.1%	100.0%	99.9%	99.8%	99.8%	99.7%	99.6%	99.5%	99.4%	99.3%	99.2%	99.2%	99.1%	99.0%	98.9%	98.8%	98.7%	98.7%	98.6%	98.5%	98.4%	98.3%	98.2%	98.2%	98.1%	98.0%	97.9%
12	100.0%	99.9%	99.8%	99.7%	99.7%	99.6%	99.5%	99.4%	99.3%	99.3%	99.2%	99.1%	99.0%	98.9%	98.9%	98.8%	98.7%	98.6%	98.5%	98.4%	98.4%	98.3%	98.2%	98.1%	98.0%	98.0%	97.9%	97.8%	97.7%	97.6%	97.6%
13	99.5%	99.4%	99.4%	99.3%	99.2%	99.1%	99.1%	99.0%	98.9%	98.8%	98.8%	98.7%	98.6%	98.5%	98.5%	98.4%	98.3%	98.2%	98.1%	98.1%	98.0%	97.9%	97.8%	97.8%	97.7%	97.6%	97.5%	97.5%	97.4%	97.3%	97.2%
14	99.1%	99.0%	98.9%	98.9%	98.8%	98.7%	98.6%	98.6%	98.5%	98.4%	98.3%	98.3%	98.2%	98.1%	98.1%	98.0%	97.9%	97.8%	97.8%	97.7%	97.6%	97.6%	97.5%	97.4%	97.3%	97.3%	97.2%	97.1%	97.0%	97.0%	96.9%
15	98.6%	98.5%	98.5%	98.4%	98.3%	98.3%	98.2%	98.1%	98.1%	98.0%	97.9%	97.9%	97.8%	97.7%	97.7%	97.6%	97.5%	97.5%	97.4%	97.3%	97.2%	97.2%	97.1%	97.0%	97.0%	96.9%	96.8%	96.8%	96.7%	96.6%	96.6%
16		98.1%	98.0%	98.0%	97.9%	97.8%	97.8%	97.7%	97.6%	97.6%	97.5%	97.5%	97.4%	97.3%	97.3%	97.2%	97.1%	97.1%	97.0%	96.9%	96.9%	96.8%	96.7%	96.7%	96.6%	96.6%	96.5%	96.4%	96.4%	96.3%	96.2%
17			97.6%	97.5%	97.5%	97.4%	97.3%	97.3%	97.2%	97.2%	97.1%	97.0%	97.0%	96.9%	96.9%	96.8%	96.7%	96.7%	96.6%	96.6%	96.5%	96.4%	96.4%	96.3%	96.3%	96.2%	96.1%	96.1%	96.0%	96.0%	95.9%
18				97.1%	97.0%	97.0%	96.9%	96.9%	96.8%	96.7%	96.7%	96.6%	96.6%	96.5%	96.5%	96.4%	96.4%	96.3%	96.2%	96.2%	96.1%	96.1%	96.0%	96.0%	95.9%	95.8%	95.8%	95.7%	95.7%	95.6%	95.6%
19					96.6%	96.5%	96.5%	96.4%	96.4%	96.3%	96.3%	96.2%	96.2%	96.1%	96.1%	96.0%	96.0%	95.9%	95.9%	95.8%	95.8%	95.7%	95.7%	95.6%	95.5%	95.5%	95.4%	95.4%	95.3%	95.3%	95.2%
20						96.1%	96.1%	96.0%	96.0%	95.9%	95.9%	95.8%	95.8%	95.7%	95.7%	95.6%	95.6%	95.5%	95.5%	95.4%	95.4%	95.3%	95.3%	95.2%	95.2%	95.1%	95.1%	95.0%	95.0%	94.9%	94.9%
21							95.6%	95.6%	95.5%	95.5%	95.4%	95.4%	95.4%	95.3%	95.3%	95.2%	95.2%	95.1%	95.1%	95.1%	95.0%	95.0%	94.9%	94.9%	94.8%	94.8%	94.7%	94.7%	94.7%	94.6%	94.6%
22								95.2%	95.1%	95.1%	95.0%	95.0%	95.0%	94.9%	94.9%	94.8%	94.8%	94.8%	94.7%	94.7%	94.6%	94.6%	94.6%	94.5%	94.5%	94.4%	94.4%	94.4%	94.3%	94.3%	94.2%
23									94.7%	94.7%	94.6%	94.6%	94.6%	94.5%	94.5%	94.4%	94.4%	94.4%	94.3%	94.3%	94.3%	94.2%	94.2%	94.2%	94.1%	94.1%	94.0%	94.0%	94.0%	93.9%	93.9%
24										94.2%	94.2%	94.2%	94.1%	94.1%	94.1%	94.0%	94.0%	94.0%	94.0%	93.9%	93.9%	93.9%	93.8%	93.8%	93.8%	93.7%	93.7%	93.7%	93.6%	93.6%	93.6%
25											93.8%	93.8%	93.7%	93.7%	93.7%	93.7%	93.6%	93.6%	93.6%	93.5%	93.5%	93.5%	93.5%	93.4%	93.4%	93.4%	93.3%	93.3%	93.3%	93.3%	93.2%

SCx	RRH →																														
	15	16	17	18	19	20	21	22	23	24	25	26	27	28	29	30	31	32	33	34	35	36	37	38	39	40	41	42	43	44	45
FRH ↓ 5	98.6%	98.8%	99.1%	99.4%	99.7%	100.0%	100.3%	100.6%	100.9%	101.2%	101.5%	101.8%	102.1%	102.4%	102.7%	102.9%	103.2%	103.5%	103.8%	104.1%	104.4%	104.7%	105.0%	105.3%	105.6%	105.9%	106.2%	106.5%	106.8%	107.0%	107.3%
6	98.3%	98.6%	98.8%	99.1%	99.4%	99.7%	100.0%	100.3%	100.6%	100.9%	101.2%	101.5%	101.8%	102.1%	102.4%	102.6%	102.9%	103.2%	103.5%	103.8%	104.1%	104.4%	104.7%	105.0%	105.3%	105.6%	105.9%	106.2%	106.5%	106.7%	107.0%
7	98.0%	98.3%	98.5%	98.8%	99.1%	99.4%	99.7%	100.0%	100.3%	100.6%	100.9%	101.2%	101.5%	101.8%	102.1%	102.4%	102.6%	102.9%	103.2%	103.5%	103.8%	104.1%	104.4%	104.7%	105.0%	105.3%	105.6%	105.9%	106.2%	106.4%	106.7%
8	97.7%	98.0%	98.3%	98.5%	98.8%	99.1%	99.4%	99.7%	100.0%	100.3%	100.6%	100.9%	101.2%	101.5%	101.8%	102.1%	102.3%	102.6%	102.9%	103.2%	103.5%	103.8%	104.1%	104.4%	104.7%	105.0%	105.3%	105.6%	105.9%	106.1%	106.4%
9	97.4%	97.7%	98.0%	98.3%	98.5%	98.8%	99.1%	99.4%	99.7%	100.0%	100.3%	100.6%	100.9%	101.2%	101.5%	101.8%	102.1%	102.3%	102.6%	102.9%	103.2%	103.5%	103.8%	104.1%	104.4%	104.7%	105.0%	105.3%	105.6%	105.8%	106.1%
10	97.1%	97.4%	97.7%	98.0%	98.2%	98.5%	98.8%	99.1%	99.4%	99.7%	100.0%	100.3%	100.6%	100.9%	101.2%	101.5%	101.8%	102.0%	102.3%	102.6%	102.9%	103.2%	103.5%	103.8%	104.1%	104.4%	104.7%	105.0%	105.3%	105.6%	105.8%
11	96.8%	97.1%	97.4%	97.7%	98.0%	98.2%	98.5%	98.8%	99.1%	99.4%	99.7%	100.0%	100.3%	100.6%	100.9%	101.2%	101.5%	101.7%	102.0%	102.3%	102.6%	102.9%	103.2%	103.5%	103.8%	104.1%	104.4%	104.7%	105.0%	105.3%	105.5%
12	96.5%	96.8%	97.1%	97.4%	97.7%	97.9%	98.2%	98.5%	98.8%	99.1%	99.4%	99.7%	100.0%	100.3%	100.6%	100.9%	101.2%	101.5%	101.7%	102.0%	102.3%	102.6%	102.9%	103.2%	103.5%	103.8%	104.1%	104.4%	104.7%	105.0%	105.2%
13	96.2%	96.5%	96.8%	97.1%	97.4%	97.7%	97.9%	98.2%	98.5%	98.8%	99.1%	99.4%	99.7%	100.0%	100.3%	100.6%	100.9%	101.2%	101.4%	101.7%	102.0%	102.3%	102.6%	102.9%	103.2%	103.5%	103.8%	104.1%	104.4%	104.7%	104.9%
14	95.9%	96.2%	96.5%	96.8%	97.1%	97.4%	97.6%	97.9%	98.2%	98.5%	98.8%	99.1%	99.4%	99.7%	100.0%	100.3%	100.6%	100.9%	101.1%	101.4%	101.7%	102.0%	102.3%	102.6%	102.9%	103.2%	103.5%	103.8%	104.1%	104.4%	104.6%
15	95.6%	95.9%	96.2%	96.5%	96.8%	97.1%	97.4%	97.6%	97.9%	98.2%	98.5%	98.8%	99.1%	99.4%	99.7%	100.0%	100.3%	100.6%	100.8%	101.1%	101.4%	101.7%	102.0%	102.3%	102.6%	102.9%	103.2%	103.5%	103.8%	104.1%	104.3%
16		95.6%	95.9%	96.2%	96.5%	96.8%	97.1%	97.3%	97.6%	97.9%	98.2%	98.5%	98.8%	99.1%	99.4%	99.7%	100.0%	100.3%	100.6%	100.8%	101.1%	101.4%	101.7%	102.0%	102.3%	102.6%	102.9%	103.2%	103.5%	103.8%	104.0%
17			95.6%	95.9%	96.2%	96.5%	96.8%	97.1%	97.3%	97.6%	97.9%	98.2%	98.5%	98.8%	99.1%	99.4%	99.7%	100.0%	100.3%	100.5%	100.8%	101.1%	101.4%	101.7%	102.0%	102.3%	102.6%	102.9%	103.2%	103.5%	103.7%
18				95.6%	95.9%	96.2%	96.5%	96.8%	97.0%	97.3%	97.6%	97.9%	98.2%	98.5%	98.8%	99.1%	99.4%	99.7%	100.0%	100.2%	100.5%	100.8%	101.1%	101.4%	101.7%	102.0%	102.3%	102.6%	102.9%	103.2%	103.5%
19					95.6%	95.9%	96.2%	96.5%	96.7%	97.0%	97.3%	97.6%	97.9%	98.2%	98.5%	98.8%	99.1%	99.4%	99.7%	100.0%	100.2%	100.5%	100.8%	101.1%	101.4%	101.7%	102.0%	102.3%	102.6%	102.9%	103.2%
20						95.6%	95.9%	96.2%	96.5%	96.7%	97.0%	97.3%	97.6%	97.9%	98.2%	98.5%	98.8%	99.1%	99.4%	99.7%	99.9%	100.2%	100.5%	100.8%	101.1%	101.4%	101.7%	102.0%	102.3%	102.6%	102.9%
21							95.6%	95.9%	96.2%	96.4%	96.7%	97.0%	97.3%	97.6%	97.9%	98.2%	98.5%	98.8%	99.1%	99.4%	99.6%	99.9%	100.2%	100.5%	100.8%	101.1%	101.4%	101.7%	102.0%	102.3%	102.6%
22								95.6%	95.9%	96.2%	96.4%	96.7%	97.0%	97.3%	97.6%	97.9%	98.2%	98.5%	98.8%	99.1%	99.3%	99.6%	99.9%	100.2%	100.5%	100.8%	101.1%	101.4%	101.7%	102.0%	102.3%
23									95.6%	95.9%	96.1%	96.4%	96.7%	97.0%	97.3%	97.6%	97.9%	98.2%	98.5%	98.8%	99.1%	99.3%	99.6%	99.9%	100.2%	100.5%	100.8%	101.1%	101.4%	101.7%	102.0%
24										95.6%	95.8%	96.1%	96.4%	96.7%	97.0%	97.3%	97.6%	97.9%	98.2%	98.5%	98.8%	99.0%	99.3%	99.6%	99.9%	100.2%	100.5%	100.8%	101.1%	101.4%	101.7%
25											95.6%	95.8%	96.1%	96.4%	96.7%	97.0%	97.3%	97.6%	97.9%	98.2%	98.5%	98.7%	99.0%	99.3%	99.6%	99.9%	100.2%	100.5%	100.8%	101.1%	101.4%

4.6 WING SENSITIVITY

The following table report the percentage changes from the datum point resulting from the change of flap angles (FW = Front Wing Flap Angle / RW = Rear Wing Top Assembly Angle). The following tables are referred to the “both the front flaps on, without gurney flap installed” maps.

4.6.1 Wing Sensitivity, both the front flaps on, without gurney flap installed

	Δ %F		FW →																						
			A1	A2	A3	A4	A5	B1	B2	B3	B4	B5	C1	C2	C3	C4	C5	D1	D2	D3	D4	D5	E1	E2	E3
			20	21	22	23	24	25	26	27	28	29	30	31	32	33	34	35	36	37	38	39	40	41	42
RW	A1	6	-8.7%	-7.6%	-6.6%	-5.6%	-4.6%	-3.6%	-2.6%	-1.6%	-0.6%	+0.4%	+1.5%	+2.5%	+3.5%	+4.5%	+5.5%	+6.5%	+7.5%	+8.5%	+9.6%	+10.6%	+11.6%	+12.6%	+13.6%
↓	A2	7	-9.0%	-8.0%	-7.0%	-6.0%	-5.0%	-4.0%	-2.9%	-1.9%	-0.9%	+0.1%	+1.1%	+2.1%	+3.1%	+4.1%	+5.1%	+6.1%	+7.1%	+8.2%	+9.2%	+10.2%	+11.2%	+12.2%	+13.2%
	A3	8	-9.3%	-8.3%	-7.3%	-6.3%	-5.3%	-4.3%	-3.3%	-2.3%	-1.3%	-0.3%	+0.7%	+1.7%	+2.7%	+3.7%	+4.8%	+5.8%	+6.8%	+7.8%	+8.8%	+9.8%	+10.8%	+11.8%	+12.8%
	A4	9	-9.7%	-8.7%	-7.7%	-6.7%	-5.7%	-4.7%	-3.6%	-2.6%	-1.6%	-0.6%	+0.4%	+1.4%	+2.4%	+3.4%	+4.4%	+5.4%	+6.4%	+7.4%	+8.4%	+9.4%	+10.4%	+11.4%	+12.4%
	A5	10	-10.0%	-9.0%	-8.0%	-7.0%	-6.0%	-5.0%	-4.0%	-3.0%	-2.0%	-1.0%	0.0%	+1.0%	+2.0%	+3.0%	+4.0%	+5.0%	+6.0%	+7.0%	+8.0%	+9.0%	+10.0%	+11.0%	+12.0%
	B1	11	-10.3%	-9.3%	-8.3%	-7.3%	-6.3%	-5.4%	-4.4%	-3.4%	-2.4%	-1.4%	-0.4%	+0.6%	+1.6%	+2.6%	+3.6%	+4.6%	+5.6%	+6.6%	+7.6%	+8.6%	+9.6%	+10.6%	+11.6%
	B2	12	-10.7%	-9.7%	-8.7%	-7.7%	-6.7%	-5.7%	-4.7%	-3.7%	-2.7%	-1.7%	-0.7%	+0.3%	+1.3%	+2.3%	+3.2%	+4.2%	+5.2%	+6.2%	+7.2%	+8.2%	+9.2%	+10.2%	+11.2%
	B3	13	-11.0%	-10.0%	-9.0%	-8.0%	-7.0%	-6.1%	-5.1%	-4.1%	-3.1%	-2.1%	-1.1%	-0.1%	+0.9%	+1.9%	+2.9%	+3.9%	+4.9%	+5.8%	+6.8%	+7.8%	+8.8%	+9.8%	+10.8%
	B4	14	-11.3%	-10.4%	-9.4%	-8.4%	-7.4%	-6.4%	-5.4%	-4.4%	-3.4%	-2.4%	-1.5%	-0.5%	+0.5%	+1.5%	+2.5%	+3.5%	+4.5%	+5.5%	+6.4%	+7.4%	+8.4%	+9.4%	+10.4%
	B5	15	-11.7%	-10.7%	-9.7%	-8.7%	-7.7%	-6.8%	-5.8%	-4.8%	-3.8%	-2.8%	-1.8%	-0.8%	+0.1%	+1.1%	+2.1%	+3.1%	+4.1%	+5.1%	+6.1%	+7.0%	+8.0%	+9.0%	+10.0%
	C1	16	-12.0%	-11.0%	-10.0%	-9.1%	-8.1%	-7.1%	-6.1%	-5.1%	-4.2%	-3.2%	-2.2%	-1.2%	-0.2%	+0.8%	+1.7%	+2.7%	+3.7%	+4.7%	+5.7%	+6.6%	+7.6%	+8.6%	+9.6%
	C2	17	-12.3%	-11.4%	-10.4%	-9.4%	-8.4%	-7.5%	-6.5%	-5.5%	-4.5%	-3.5%	-2.6%	-1.6%	-0.6%	+0.4%	+1.4%	+2.3%	+3.3%	+4.3%	+5.3%	+6.3%	+7.2%	+8.2%	+9.2%
	C3	18	-12.7%	-11.7%	-10.7%	-9.8%	-8.8%	-7.8%	-6.8%	-5.8%	-4.9%	-3.9%	-2.9%	-1.9%	-1.0%	+0.0%	+1.0%	+2.0%	+2.9%	+3.9%	+4.9%	+5.9%	+6.8%	+7.8%	+8.8%
	C4	19	-13.0%	-12.0%	-11.1%	-10.1%	-9.1%	-8.2%	-7.2%	-6.2%	-5.2%	-4.3%	-3.3%	-2.3%	-1.3%	-0.4%	+0.6%	+1.6%	+2.6%	+3.5%	+4.5%	+5.5%	+6.4%	+7.4%	+8.4%
	C5	20	-13.4%	-12.4%	-11.4%	-10.4%	-9.5%	-8.5%	-7.5%	-6.6%	-5.6%	-4.6%	-3.7%	-2.7%	-1.7%	-0.7%	+0.2%	+1.2%	+2.2%	+3.1%	+4.1%	+5.1%	+6.1%	+7.0%	+8.0%
	D1	21	-13.7%	-12.7%	-11.8%	-10.8%	-9.8%	-8.9%	-7.9%	-6.9%	-5.9%	-5.0%	-4.0%	-3.0%	-2.1%	-1.1%	-0.1%	+0.8%	+1.8%	+2.8%	+3.7%	+4.7%	+5.7%	+6.6%	+7.6%
	D2	22	-14.0%	-13.1%	-12.1%	-11.1%	-10.2%	-9.2%	-8.2%	-7.3%	-6.3%	-5.3%	-4.4%	-3.4%	-2.5%	-1.5%	-0.5%	+0.4%	+1.4%	+2.4%	+3.3%	+4.3%	+5.3%	+6.2%	+7.2%
	D3	23	-14.4%	-13.4%	-12.4%	-11.5%	-10.5%	-9.6%	-8.6%	-7.6%	-6.7%	-5.7%	-4.7%	-3.8%	-2.8%	-1.9%	-0.9%	+0.1%	+1.0%	+2.0%	+2.9%	+3.9%	+4.9%	+5.8%	+6.8%
	D4	24	-14.7%	-13.7%	-12.8%	-11.8%	-10.9%	-9.9%	-8.9%	-8.0%	-7.0%	-6.1%	-5.1%	-4.2%	-3.2%	-2.2%	-1.3%	-0.3%	+0.6%	+1.6%	+2.6%	+3.5%	+4.5%	+5.4%	+6.4%
	D5	25	-15.0%	-14.1%	-13.1%	-12.2%	-11.2%	-10.3%	-9.3%	-8.3%	-7.4%	-6.4%	-5.5%	-4.5%	-3.6%	-2.6%	-1.7%	-0.7%	+0.3%	+1.2%	+2.2%	+3.1%	+4.1%	+5.0%	+6.0%

SCz			FW →																						
			A1	A2	A3	A4	A5	B1	B2	B3	B4	B5	C1	C2	C3	C4	C5	D1	D2	D3	D4	D5	E1	E2	E3
			20	21	22	23	24	25	26	27	28	29	30	31	32	33	34	35	36	37	38	39	40	41	42
RW ↓	A1	6	93.5%	93.9%	94.3%	94.7%	95.0%	95.4%	95.8%	96.2%	96.5%	96.9%	97.3%	97.7%	98.0%	98.4%	98.8%	99.2%	99.6%	99.9%					
	A2	7	94.3%	94.6%	95.0%	95.4%	95.8%	96.1%	96.5%	96.9%	97.2%	97.6%	98.0%	98.3%	98.7%	99.1%	99.4%	99.8%	100.2%	100.6%					
	A3	8	95.0%	95.4%	95.7%	96.1%	96.5%	96.8%	97.2%	97.6%	97.9%	98.3%	98.6%	99.0%	99.4%	99.7%	100.1%	100.5%	100.8%	101.2%					
	A4	9	95.8%	96.1%	96.5%	96.8%	97.2%	97.5%	97.9%	98.3%	98.6%	99.0%	99.3%	99.7%	100.0%	100.4%	100.7%	101.1%	101.5%	101.8%					
	A5	10	96.5%	96.9%	97.2%	97.6%	97.9%	98.3%	98.6%	99.0%	99.3%	99.7%	100.0%	100.3%	100.7%	101.0%	101.4%	101.7%	102.1%	102.4%					
	B1	11	97.3%	97.6%	97.9%	98.3%	98.6%	99.0%	99.3%	99.6%	100.0%	100.3%	100.7%	101.0%	101.4%	101.7%	102.0%	102.4%	102.7%	103.1%					
	B2	12	98.0%	98.3%	98.7%	99.0%	99.3%	99.7%	100.0%	100.3%	100.7%	101.0%	101.4%	101.7%	102.0%	102.4%	102.7%	103.0%	103.4%	103.7%					
	B3	13	98.7%	99.1%	99.4%	99.7%	100.1%	100.4%	100.7%	101.0%	101.4%	101.7%	102.0%	102.4%	102.7%	103.0%	103.3%	103.7%	104.0%	104.3%					
	B4	14	99.5%	99.8%	100.1%	100.5%	100.8%	101.1%	101.4%	101.7%	102.1%	102.4%	102.7%	103.0%	103.3%	103.7%	104.0%	104.3%	104.6%	105.0%					
	B5	15	100.2%	100.5%	100.9%	101.2%	101.5%	101.8%	102.1%	102.4%	102.8%	103.1%	103.4%	103.7%	104.0%	104.3%	104.6%	105.0%	105.3%	105.6%					
	C1	16	101.0%	101.3%	101.6%	101.9%	102.2%	102.5%	102.8%	103.1%	103.4%	103.7%	104.1%	104.4%	104.7%	105.0%	105.3%	105.6%	105.9%	106.2%					
	C2	17	101.7%	102.0%	102.3%	102.6%	102.9%	103.2%	103.5%	103.8%	104.1%	104.4%	104.7%	105.0%	105.3%	105.6%	105.9%	106.2%	106.5%	106.8%					
	C3	18	102.5%	102.8%	103.1%	103.3%	103.6%	103.9%	104.2%	104.5%	104.8%	105.1%	105.4%	105.7%	106.0%	106.3%	106.6%	106.9%	107.2%	107.5%					
	C4	19	103.2%	103.5%	103.8%	104.1%	104.4%	104.6%	104.9%	105.2%	105.5%	105.8%	106.1%	106.4%	106.7%	106.9%	107.2%	107.5%	107.8%	108.1%					
	C5	20	104.0%	104.2%	104.5%	104.8%	105.1%	105.4%	105.6%	105.9%	106.2%	106.5%	106.8%	107.0%	107.3%	107.6%	107.9%	108.2%	108.4%	108.7%					
	D1	21	104.7%	105.0%	105.2%	105.5%	105.8%	106.1%	106.3%	106.6%	106.9%	107.2%	107.4%	107.7%	108.0%	108.3%	108.5%	108.8%	109.1%	109.4%					
	D2	22	105.4%	105.7%	106.0%	106.2%	106.5%	106.8%	107.0%	107.3%	107.6%	107.8%	108.1%	108.4%	108.6%	108.9%	109.2%	109.5%	109.7%	110.0%					
	D3	23	106.2%	106.4%	106.7%	107.0%	107.2%	107.5%	107.7%	108.0%	108.3%	108.5%	108.8%	109.1%	109.3%	109.6%	109.8%	110.1%	110.4%	110.6%					
	D4	24	106.9%	107.2%	107.4%	107.7%	107.9%	108.2%	108.5%	108.7%	109.0%	109.2%	109.5%	109.7%	110.0%	110.2%	110.5%	110.7%	111.0%	111.2%					
	D5	25	107.7%	107.9%	108.2%	108.4%	108.7%	108.9%	109.2%	109.4%	109.6%	109.9%	110.1%	110.4%	110.6%	110.9%	111.1%	111.4%	111.6%	111.9%					

Nonlinear behaviour

SCx			FW →																						
			A1	A2	A3	A4	A5	B1	B2	B3	B4	B5	C1	C2	C3	C4	C5	D1	D2	D3	D4	D5	E1	E2	E3
			20	21	22	23	24	25	26	27	28	29	30	31	32	33	34	35	36	37	38	39	40	41	42
RW ↓	A1	6	91.1%	91.7%	92.3%	92.8%	93.4%	94.0%	94.6%	95.1%	95.7%	96.3%	96.9%	97.4%	98.0%	98.6%	99.2%	99.7%	100.3%	100.9%					
	A2	7	92.0%	92.6%	93.1%	93.7%	94.3%	94.8%	95.4%	96.0%	96.5%	97.1%	97.6%	98.2%	98.8%	99.3%	99.9%	100.4%	101.0%	101.6%					
	A3	8	92.9%	93.5%	94.0%	94.6%	95.1%	95.7%	96.2%	96.8%	97.3%	97.9%	98.4%	99.0%	99.5%	100.1%	100.6%	101.2%	101.7%	102.3%					
	A4	9	93.8%	94.4%	94.9%	95.5%	96.0%	96.5%	97.1%	97.6%	98.1%	98.7%	99.2%	99.8%	100.3%	100.8%	101.4%	101.9%	102.4%	103.0%					
	A5	10	94.8%	95.3%	95.8%	96.3%	96.9%	97.4%	97.9%	98.4%	99.0%	99.5%	100.0%	100.5%	101.0%	101.6%	102.1%	102.6%	103.1%	103.7%					
	B1	11	95.7%	96.2%	96.7%	97.2%	97.7%	98.2%	98.7%	99.3%	99.8%	100.3%	100.8%	101.3%	101.8%	102.3%	102.8%	103.3%	103.9%	104.4%					
	B2	12	96.6%	97.1%	97.6%	98.1%	98.6%	99.1%	99.6%	100.1%	100.6%	101.1%	101.6%	102.1%	102.6%	103.1%	103.6%	104.1%	104.6%	105.1%					
	B3	13	97.5%	98.0%	98.5%	99.0%	99.4%	99.9%	100.4%	100.9%	101.4%	101.9%	102.4%	102.8%	103.3%	103.8%	104.3%	104.8%	105.3%	105.8%					
	B4	14	98.4%	98.9%	99.4%	99.8%	100.3%	100.8%	101.2%	101.7%	102.2%	102.7%	103.1%	103.6%	104.1%	104.6%	105.0%	105.5%	106.0%	106.5%					
	B5	15	99.3%	99.8%	100.2%	100.7%	101.2%	101.6%	102.1%	102.5%	103.0%	103.5%	103.9%	104.4%	104.9%	105.3%	105.8%	106.2%	106.7%	107.2%					
	C1	16	100.2%	100.7%	101.1%	101.6%	102.0%	102.5%	102.9%	103.4%	103.8%	104.3%	104.7%	105.2%	105.6%	106.1%	106.5%	107.0%	107.4%	107.9%					
	C2	17	101.1%	101.6%	102.0%	102.4%	102.9%	103.3%	103.8%	104.2%	104.6%	105.1%	105.5%	105.9%	106.4%	106.8%	107.3%	107.7%	108.1%	108.6%					
	C3	18	102.0%	102.5%	102.9%	103.3%	103.7%	104.2%	104.6%	105.0%	105.4%	105.9%	106.3%	106.7%	107.1%	107.6%	108.0%	108.4%	108.8%	109.3%					
	C4	19	103.0%	103.4%	103.8%	104.2%	104.6%	105.0%	105.4%	105.8%	106.3%	106.7%	107.1%	107.5%	107.9%	108.3%	108.7%	109.1%	109.6%	110.0%					
	C5	20	103.9%	104.3%	104.7%	105.1%	105.5%	105.9%	106.3%	106.7%	107.1%	107.5%	107.9%	108.3%	108.7%	109.1%	109.5%	109.9%	110.3%	110.7%					
	D1	21	104.8%	105.2%	105.6%	105.9%	106.3%	106.7%	107.1%	107.5%	107.9%	108.3%	108.7%	109.0%	109.4%	109.8%	110.2%	110.6%	111.0%	111.4%					
	D2	22	105.7%	106.1%	106.4%	106.8%	107.2%	107.6%	107.9%	108.3%	108.7%	109.1%	109.4%	109.8%	110.2%	110.6%	110.9%	111.3%	111.7%	112.1%					
	D3	23	106.6%	107.0%	107.3%	107.7%	108.1%	108.4%	108.8%	109.1%	109.5%	109.9%	110.2%	110.6%	110.9%	111.3%	111.7%	112.0%	112.4%	112.8%					
	D4	24	107.5%	107.9%	108.2%	108.6%	108.9%	109.3%	109.6%	110.0%	110.3%	110.7%	111.0%	111.4%	111.7%	112.1%	112.4%	112.8%	113.1%	113.5%					
	D5	25	108.4%	108.8%	109.1%	109.4%	109.8%	110.1%	110.4%	110.8%	111.1%	111.5%	111.8%	112.1%	112.5%	112.8%	113.1%	113.5%	113.8%	114.2%					

Nonlinear behaviour

4.6.2 Wing Sensitivity, both the front flaps on, with gurney flap (190mmx15mm) installed

	Δ %F		FW →																							
			A1	A2	A3	A4	A5	B1	B2	B3	B4	B5	C1	C2	C3	C4	C5	D1	D2	D3	D4	D5	E1	E2	E3
			20	21	22	23	24	25	26	27	28	29	30	31	32	33	34	35	36	37	38	39	40	41	42
RW ↓	A1	6	-9.7%	-8.5%	-7.3%	-6.1%	-4.9%	-3.7%	-2.5%	-1.3%	-0.1%	+1.1%	+2.3%	+3.5%	+4.6%	+5.8%	+7.0%	+8.2%	+9.4%	+10.6%	+11.8%	+13.0%	+14.2%	+15.4%	+16.6%
	A2	7	-10.0%	-8.8%	-7.6%	-6.4%	-5.2%	-4.1%	-2.9%	-1.7%	-0.5%	+0.7%	+1.9%	+3.1%	+4.3%	+5.5%	+6.7%	+7.8%	+9.0%	+10.2%	+11.4%	+12.6%	+13.8%	+15.0%	+16.2%
	A3	8	-10.3%	-9.1%	-8.0%	-6.8%	-5.6%	-4.4%	-3.2%	-2.0%	-0.8%	+0.3%	+1.5%	+2.7%	+3.9%	+5.1%	+6.3%	+7.5%	+8.6%	+9.8%	+11.0%	+12.2%	+13.4%	+14.6%	+15.8%
	A4	9	-10.7%	-9.5%	-8.3%	-7.1%	-5.9%	-4.8%	-3.6%	-2.4%	-1.2%	-0.0%	+1.2%	+2.3%	+3.5%	+4.7%	+5.9%	+7.1%	+8.3%	+9.4%	+10.6%	+11.8%	+13.0%	+14.2%	+15.4%
	A5	10	-11.0%	-9.8%	-8.6%	-7.5%	-6.3%	-5.1%	-3.9%	-2.7%	-1.6%	-0.4%	0.8%	+2.0%	+3.2%	+4.3%	+5.5%	+6.7%	+7.9%	+9.1%	+10.2%	+11.4%	+12.6%	+13.8%	+15.0%
	B1	11	-11.3%	-10.2%	-9.0%	-7.8%	-6.6%	-5.5%	-4.3%	-3.1%	-1.9%	-0.7%	+0.4%	+1.6%	+2.8%	+4.0%	+5.1%	+6.3%	+7.5%	+8.7%	+9.9%	+11.0%	+12.2%	+13.4%	+14.6%
	B2	12	-11.7%	-10.5%	-9.3%	-8.1%	-7.0%	-5.8%	-4.6%	-3.5%	-2.3%	-1.1%	+0.1%	+1.2%	+2.4%	+3.6%	+4.8%	+5.9%	+7.1%	+8.3%	+9.5%	+10.6%	+11.8%	+13.0%	+14.2%
	B3	13	-12.0%	-10.8%	-9.7%	-8.5%	-7.3%	-6.2%	-5.0%	-3.8%	-2.6%	-1.5%	-0.3%	+0.9%	+2.0%	+3.2%	+4.4%	+5.6%	+6.7%	+7.9%	+9.1%	+10.2%	+11.4%	+12.6%	+13.8%
	B4	14	-12.3%	-11.2%	-10.0%	-8.8%	-7.7%	-6.5%	-5.3%	-4.2%	-3.0%	-1.8%	-0.7%	+0.5%	+1.7%	+2.8%	+4.0%	+5.2%	+6.3%	+7.5%	+8.7%	+9.9%	+11.0%	+12.2%	+13.4%
	B5	15	-12.7%	-11.5%	-10.3%	-9.2%	-8.0%	-6.9%	-5.7%	-4.5%	-3.4%	-2.2%	-1.0%	+0.1%	+1.3%	+2.5%	+3.6%	+4.8%	+6.0%	+7.1%	+8.3%	+9.5%	+10.6%	+11.8%	+13.0%
	C1	16	-13.0%	-11.8%	-10.7%	-9.5%	-8.4%	-7.2%	-6.0%	-4.9%	-3.7%	-2.6%	-1.4%	-0.2%	+0.9%	+2.1%	+3.3%	+4.4%	+5.6%	+6.7%	+7.9%	+9.1%	+10.2%	+11.4%	+12.6%
	C2	17	-13.3%	-12.2%	-11.0%	-9.9%	-8.7%	-7.6%	-6.4%	-5.2%	-4.1%	-2.9%	-1.8%	-0.6%	+0.6%	+1.7%	+2.9%	+4.0%	+5.2%	+6.4%	+7.5%	+8.7%	+9.8%	+11.0%	+12.2%
	C3	18	-13.7%	-12.5%	-11.4%	-10.2%	-9.1%	-7.9%	-6.7%	-5.6%	-4.4%	-3.3%	-2.1%	-1.0%	+0.2%	+1.3%	+2.5%	+3.7%	+4.8%	+6.0%	+7.1%	+8.3%	+9.4%	+10.6%	+11.8%
	C4	19	-14.0%	-12.9%	-11.7%	-10.6%	-9.4%	-8.3%	-7.1%	-5.9%	-4.8%	-3.6%	-2.5%	-1.3%	-0.2%	+1.0%	+2.1%	+3.3%	+4.4%	+5.6%	+6.7%	+7.9%	+9.0%	+10.2%	+11.4%
	C5	20	-14.4%	-13.2%	-12.1%	-10.9%	-9.8%	-8.6%	-7.5%	-6.3%	-5.2%	-4.0%	-2.9%	-1.7%	-0.5%	+0.6%	+1.8%	+2.9%	+4.1%	+5.2%	+6.4%	+7.5%	+8.7%	+9.8%	+11.0%
	D1	21	-14.7%	-13.5%	-12.4%	-11.2%	-10.1%	-9.0%	-7.8%	-6.7%	-5.5%	-4.4%	-3.2%	-2.1%	-0.9%	+0.2%	+1.4%	+2.5%	+3.7%	+4.8%	+6.0%	+7.1%	+8.3%	+9.4%	+10.5%
	D2	22	-15.0%	-13.9%	-12.7%	-11.6%	-10.4%	-9.3%	-8.2%	-7.0%	-5.9%	-4.7%	-3.6%	-2.4%	-1.3%	-0.1%	+1.0%	+2.1%	+3.3%	+4.4%	+5.6%	+6.7%	+7.9%	+9.0%	+10.1%
	D3	23	-15.4%	-14.2%	-13.1%	-11.9%	-10.8%	-9.7%	-8.5%	-7.4%	-6.2%	-5.1%	-3.9%	-2.8%	-1.7%	-0.5%	+0.6%	+1.8%	+2.9%	+4.0%	+5.2%	+6.3%	+7.5%	+8.6%	+9.7%
	D4	24	-15.7%	-14.6%	-13.4%	-12.3%	-11.1%	-10.0%	-8.9%	-7.7%	-6.6%	-5.4%	-4.3%	-3.2%	-2.0%	-0.9%	+0.2%	+1.4%	+2.5%	+3.7%	+4.8%	+5.9%	+7.1%	+8.2%	+9.3%
	D5	25	-16.0%	-14.9%	-13.8%	-12.6%	-11.5%	-10.4%	-9.2%	-8.1%	-6.9%	-5.8%	-4.7%	-3.5%	-2.4%	-1.3%	-0.1%	+1.0%	+2.1%	+3.3%	+4.4%	+5.5%	+6.7%	+7.8%	+8.9%

	SCz		FW →																						
			A1	A2	A3	A4	A5	B1	B2	B3	B4	B5	C1	C2	C3	C4	C5	D1	D2	D3	D4	D5	E1	E2	E3
			20	21	22	23	24	25	26	27	28	29	30	31	32	33	34	35	36	37	38	39	40	41	42
RW ↓	A1	6	94.7%	95.1%	95.5%	95.9%	96.3%	96.7%	97.2%	97.6%	98.0%	98.4%	98.8%	99.2%	99.6%	100.0%	100.4%	100.9%	101.3%	101.7%					
	A2	7	95.4%	95.8%	96.2%	96.6%	97.0%	97.4%	97.9%	98.3%	98.7%	99.1%	99.5%	99.9%	100.3%	100.7%	101.1%	101.5%	101.9%	102.3%					
	A3	8	96.2%	96.6%	97.0%	97.4%	97.8%	98.2%	98.6%	99.0%	99.4%	99.8%	100.1%	100.5%	100.9%	101.3%	101.7%	102.1%	102.5%	102.9%					
	A4	9	96.9%	97.3%	97.7%	98.1%	98.5%	98.9%	99.3%	99.7%	100.0%	100.4%	100.8%	101.2%	101.6%	102.0%	102.4%	102.8%	103.2%	103.6%					
	A5	10	97.7%	98.0%	98.4%	98.8%	99.2%	99.6%	100.0%	100.3%	100.7%	101.1%	101.5%	101.9%	102.3%	102.7%	103.0%	103.4%	103.8%	104.2%					
	B1	11	98.4%	98.8%	99.2%	99.5%	99.9%	100.3%	100.7%	101.0%	101.4%	101.8%	102.2%	102.6%	102.9%	103.3%	103.7%	104.1%	104.4%	104.8%					
	B2	12	99.1%	99.5%	99.9%	100.3%	100.6%	101.0%	101.4%	101.7%	102.1%	102.5%	102.9%	103.2%	103.6%	104.0%	104.3%	104.7%	105.1%	105.4%					
	B3	13	99.9%	100.3%	100.6%	101.0%	101.3%	101.7%	102.1%	102.4%	102.8%	103.2%	103.5%	103.9%	104.3%	104.6%	105.0%	105.3%	105.7%	106.1%					
	B4	14	100.6%	101.0%	101.4%	101.7%	102.1%	102.4%	102.8%	103.1%	103.5%	103.8%	104.2%	104.6%	104.9%	105.3%	105.6%	106.0%	106.3%	106.7%					
	B5	15	101.4%	101.7%	102.1%	102.4%	102.8%	103.1%	103.5%	103.8%	104.2%	104.5%	104.9%	105.2%	105.6%	105.9%	106.3%	106.6%	107.0%	107.3%					
	C1	16	102.1%	102.5%	102.8%	103.2%	103.5%	103.8%	104.2%	104.5%	104.9%	105.2%	105.6%	105.9%	106.2%	106.6%	106.9%	107.3%	107.6%	108.0%					
	C2	17	102.9%	103.2%	103.5%	103.9%	104.2%	104.6%	104.9%	105.2%	105.6%	105.9%	106.2%	106.6%	106.9%	107.2%	107.6%	107.9%	108.3%	108.6%					
	C3	18	103.6%	103.9%	104.3%	104.6%	104.9%	105.3%	105.6%	105.9%	106.3%	106.6%	106.9%	107.2%	107.6%	107.9%	108.2%	108.6%	108.9%	109.2%					
	C4	19	104.4%	104.7%	105.0%	105.3%	105.6%	106.0%	106.3%	106.6%	106.9%	107.3%	107.6%	107.9%	108.2%	108.6%	108.9%	109.2%	109.5%	109.8%					
	C5	20	105.1%	105.4%	105.7%	106.1%	106.4%	106.7%	107.0%	107.3%	107.6%	107.9%	108.3%	108.6%	108.9%	109.2%	109.5%	109.8%	110.2%	110.5%					
	D1	21	105.8%	106.2%	106.5%	106.8%	107.1%	107.4%	107.7%	108.0%	108.3%	108.6%	108.9%	109.2%	109.6%	109.9%	110.2%	110.5%	110.8%	111.1%					
	D2	22	106.6%	106.9%	107.2%	107.5%	107.8%	108.1%	108.4%	108.7%	109.0%	109.3%	109.6%	109.9%	110.2%	110.5%	110.8%	111.1%	111.4%	111.7%					
	D3	23	107.3%	107.6%	107.9%	108.2%	108.5%	108.8%	109.1%	109.4%	109.7%	110.0%	110.3%	110.6%	110.9%	111.2%	111.5%	111.8%	112.1%	112.4%					
	D4	24	108.1%	108.4%	108.7%	108.9%	109.2%	109.5%	109.8%	110.1%	110.4%	110.7%	111.0%	111.3%	111.5%	111.8%	112.1%	112.4%	112.7%	113.0%					
	D5	25	108.8%	109.1%	109.4%	109.7%	110.0%	110.2%	110.5%	110.8%	111.1%	111.4%	111.6%	111.9%	112.2%	112.5%	112.8%	113.1%	113.3%	113.6%					

Nonlinear behaviour

	SCx		FW →																						
			A1	A2	A3	A4	A5	B1	B2	B3	B4	B5	C1	C2	C3	C4	C5	D1	D2	D3	D4	D5	E1	E2	E3
			20	21	22	23	24	25	26	27	28	29	30	31	32	33	34	35	36	37	38	39	40	41	42
RW ↓	A1	6	91.7%	92.3%	92.9%	93.5%	94.0%	94.6%	95.2%	95.8%	96.4%	97.0%	97.6%	98.1%	98.7%	99.3%	99.9%	100.5%	101.1%	101.6%					
	A2	7	92.6%	93.2%	93.8%	94.3%	94.9%	95.5%	96.1%	96.6%	97.2%	97.8%	98.3%	98.9%	99.5%	100.1%	100.6%	101.2%	101.8%	102.3%					
	A3	8	93.5%	94.1%	94.6%	95.2%	95.8%	96.3%	96.9%	97.4%	98.0%	98.6%	99.1%	99.7%	100.2%	100.8%	101.4%	101.9%	102.5%	103.0%					
	A4	9	94.4%	95.0%	95.5%	96.1%	96.6%	97.2%	97.7%	98.3%	98.8%	99.4%	99.9%	100.5%	101.0%	101.6%	102.1%	102.7%	103.2%	103.7%					
	A5	10	95.4%	95.9%	96.4%	97.0%	97.5%	98.0%	98.6%	99.1%	99.6%	100.2%	100.7%	101.2%	101.8%	102.3%	102.8%	103.4%	103.9%	104.4%					
	B1	11	96.3%	96.8%	97.3%	97.8%	98.4%	98.9%	99.4%	99.9%	100.4%	101.0%	101.5%	102.0%	102.5%	103.1%	103.6%	104.1%	104.6%	105.1%					
	B2	12	97.2%	97.7%	98.2%	98.7%	99.2%	99.7%	100.2%	100.7%	101.3%	101.8%	102.3%	102.8%	103.3%	103.8%	104.3%	104.8%	105.3%	105.8%					
	B3	13	98.1%	98.6%	99.1%	99.6%	100.1%	100.6%	101.1%	101.6%	102.1%	102.6%	103.1%	103.6%	104.1%	104.6%	105.0%	105.5%	106.0%	106.5%					
	B4	14	99.0%	99.5%	100.0%	100.5%	100.9%	101.4%	101.9%	102.4%	102.9%	103.4%	103.8%	104.3%	104.8%	105.3%	105.8%	106.3%	106.8%	107.2%					
	B5	15	99.9%	100.4%	100.9%	101.3%	101.8%	102.3%	102.7%	103.2%	103.7%	104.2%	104.6%	105.1%	105.6%	106.0%	106.5%	107.0%	107.5%	107.9%					
	C1	16	100.8%	101.3%	101.7%	102.2%	102.7%	103.1%	103.6%	104.0%	104.5%	105.0%	105.4%	105.9%	106.3%	106.8%	107.3%	107.7%	108.2%	108.6%					
	C2	17	101.7%	102.2%	102.6%	103.1%	103.5%	104.0%	104.4%	104.9%	105.3%	105.8%	106.2%	106.7%	107.1%	107.5%	108.0%	108.4%	108.9%	109.3%					
	C3	18	102.6%	103.1%	103.5%	103.9%	104.4%	104.8%	105.3%	105.7%	106.1%	106.6%	107.0%	107.4%	107.9%	108.3%	108.7%	109.2%	109.6%	110.0%					
	C4	19	103.6%	104.0%	104.4%	104.8%	105.2%	105.7%	106.1%	106.5%	106.9%	107.4%	107.8%	108.2%	108.6%	109.0%	109.5%	109.9%	110.3%	110.7%					
	C5	20	104.5%	104.9%	105.3%	105.7%	106.1%	106.5%	106.9%	107.3%	107.7%	108.2%	108.6%	109.0%	109.4%	109.8%	110.2%	110.6%	111.0%	111.4%					
	D1	21	105.4%	105.8%	106.2%	106.6%	107.0%	107.4%	107.8%	108.2%	108.6%	109.0%	109.4%	109.7%	110.1%	110.5%	110.9%	111.3%	111.7%	112.1%					
	D2	22	106.3%	106.7%	107.1%	107.4%	107.8%	108.2%	108.6%	109.0%	109.4%	109.8%	110.1%	110.5%	110.9%	111.3%	111.7%	112.1%	112.4%	112.8%					
	D3	23	107.2%	107.6%	107.9%	108.3%	108.7%	109.1%	109.4%	109.8%	110.2%	110.6%	110.9%	111.3%	111.7%	112.0%	112.4%	112.8%	113.2%	113.5%					
	D4	24	108.1%	108.5%	108.8%	109.2%	109.6%	109.9%	110.3%	110.6%	111.0%	111.4%	111.7%	112.1%	112.4%	112.8%	113.2%	113.5%	113.9%	114.2%					
	D5	25	109.0%	109.4%	109.7%	110.1%	110.4%	110.8%	111.1%	111.5%	111.8%	112.2%	112.5%	112.8%	113.2%	113.5%	113.9%	114.2%	114.6%	114.9%					

Nonlinear behaviour

4.6.3 Wing Sensitivity, only lower front flaps on, without gurney flap installed

	Δ %F		FW →																						
			A1	A2	A3	A4	A5	B1	B2	B3	B4	B5	C1	C2	C3	C4	C5	D1	D2	D3	D4	D5	E1	E2	E3
			20	21	22	23	24	25	26	27	28	29	30	31	32	33	34	35	36	37	38	39	40	41	42
RW ↓	A1	6	-18.4%	-17.6%	-16.8%	-16.0%	-15.3%	-14.5%	-13.7%	-12.9%	-12.1%	-11.3%	-10.5%	-9.7%	-8.9%	-8.1%	-7.3%	-6.5%	-5.7%	-5.0%	-4.2%	-3.4%	-2.6%	-1.8%	-1.0%
	A2	7	-18.8%	-18.0%	-17.2%	-16.4%	-15.6%	-14.8%	-14.0%	-13.2%	-12.4%	-11.7%	-10.9%	-10.1%	-9.3%	-8.5%	-7.7%	-6.9%	-6.1%	-5.3%	-4.6%	-3.8%	-3.0%	-2.2%	-1.4%
	A3	8	-19.1%	-18.3%	-17.5%	-16.7%	-15.9%	-15.2%	-14.4%	-13.6%	-12.8%	-12.0%	-11.2%	-10.4%	-9.7%	-8.9%	-8.1%	-7.3%	-6.5%	-5.7%	-4.9%	-4.2%	-3.4%	-2.6%	-1.8%
	A4	9	-19.4%	-18.6%	-17.9%	-17.1%	-16.3%	-15.5%	-14.7%	-13.9%	-13.2%	-12.4%	-11.6%	-10.8%	-10.0%	-9.2%	-8.5%	-7.7%	-6.9%	-6.1%	-5.3%	-4.5%	-3.8%	-3.0%	-2.2%
	A5	10	-19.8%	-19.0%	-18.2%	-17.4%	-16.6%	-15.9%	-15.1%	-14.3%	-13.5%	-12.7%	-12.0%	-11.2%	-10.4%	-9.6%	-8.8%	-8.1%	-7.3%	-6.5%	-5.7%	-4.9%	-4.2%	-3.4%	-2.6%
	B1	11	-20.1%	-19.3%	-18.5%	-17.8%	-17.0%	-16.2%	-15.4%	-14.7%	-13.9%	-13.1%	-12.3%	-11.5%	-10.8%	-10.0%	-9.2%	-8.4%	-7.7%	-6.9%	-6.1%	-5.3%	-4.6%	-3.8%	-3.0%
	B2	12	-20.4%	-19.7%	-18.9%	-18.1%	-17.3%	-16.6%	-15.8%	-15.0%	-14.2%	-13.5%	-12.7%	-11.9%	-11.1%	-10.4%	-9.6%	-8.8%	-8.0%	-7.3%	-6.5%	-5.7%	-5.0%	-4.2%	-3.4%
	B3	13	-20.8%	-20.0%	-19.2%	-18.5%	-17.7%	-16.9%	-16.1%	-15.4%	-14.6%	-13.8%	-13.1%	-12.3%	-11.5%	-10.7%	-10.0%	-9.2%	-8.4%	-7.7%	-6.9%	-6.1%	-5.3%	-4.6%	-3.8%
	B4	14	-21.1%	-20.3%	-19.6%	-18.8%	-18.0%	-17.3%	-16.5%	-15.7%	-15.0%	-14.2%	-13.4%	-12.7%	-11.9%	-11.1%	-10.3%	-9.6%	-8.8%	-8.0%	-7.3%	-6.5%	-5.7%	-5.0%	-4.2%
	B5	15	-21.4%	-20.7%	-19.9%	-19.1%	-18.4%	-17.6%	-16.8%	-16.1%	-15.3%	-14.6%	-13.8%	-13.0%	-12.3%	-11.5%	-10.7%	-10.0%	-9.2%	-8.4%	-7.7%	-6.9%	-6.1%	-5.4%	-4.6%
	C1	16	-21.8%	-21.0%	-20.2%	-19.5%	-18.7%	-18.0%	-17.2%	-16.4%	-15.7%	-14.9%	-14.2%	-13.4%	-12.6%	-11.9%	-11.1%	-10.3%	-9.6%	-8.8%	-8.1%	-7.3%	-6.5%	-5.8%	-5.0%
	C2	17	-22.1%	-21.3%	-20.6%	-19.8%	-19.1%	-18.3%	-17.6%	-16.8%	-16.0%	-15.3%	-14.5%	-13.8%	-13.0%	-12.2%	-11.5%	-10.7%	-10.0%	-9.2%	-8.4%	-7.7%	-6.9%	-6.2%	-5.4%
	C3	18	-22.4%	-21.7%	-20.9%	-20.2%	-19.4%	-18.7%	-17.9%	-17.1%	-16.4%	-15.6%	-14.9%	-14.1%	-13.4%	-12.6%	-11.9%	-11.1%	-10.3%	-9.6%	-8.8%	-8.1%	-7.3%	-6.6%	-5.8%
	C4	19	-22.8%	-22.0%	-21.3%	-20.5%	-19.8%	-19.0%	-18.3%	-17.5%	-16.8%	-16.0%	-15.2%	-14.5%	-13.7%	-13.0%	-12.2%	-11.5%	-10.7%	-10.0%	-9.2%	-8.5%	-7.7%	-7.0%	-6.2%
	C5	20	-23.1%	-22.4%	-21.6%	-20.9%	-20.1%	-19.4%	-18.6%	-17.9%	-17.1%	-16.4%	-15.6%	-14.9%	-14.1%	-13.4%	-12.6%	-11.9%	-11.1%	-10.4%	-9.6%	-8.9%	-8.1%	-7.4%	-6.6%
	D1	21	-23.4%	-22.7%	-22.0%	-21.2%	-20.5%	-19.7%	-19.0%	-18.2%	-17.5%	-16.7%	-16.0%	-15.2%	-14.5%	-13.7%	-13.0%	-12.2%	-11.5%	-10.7%	-10.0%	-9.3%	-8.5%	-7.8%	-7.0%
	D2	22	-23.8%	-23.0%	-22.3%	-21.5%	-20.8%	-20.1%	-19.3%	-18.6%	-17.8%	-17.1%	-16.3%	-15.6%	-14.9%	-14.1%	-13.4%	-12.6%	-11.9%	-11.1%	-10.4%	-9.6%	-8.9%	-8.2%	-7.4%
	D3	23	-24.1%	-23.4%	-22.6%	-21.9%	-21.2%	-20.4%	-19.7%	-18.9%	-18.2%	-17.4%	-16.7%	-16.0%	-15.2%	-14.5%	-13.7%	-13.0%	-12.3%	-11.5%	-10.8%	-10.0%	-9.3%	-8.6%	-7.8%
	D4	24	-24.5%	-23.7%	-23.0%	-22.2%	-21.5%	-20.8%	-20.0%	-19.3%	-18.5%	-17.8%	-17.1%	-16.3%	-15.6%	-14.9%	-14.1%	-13.4%	-12.6%	-11.9%	-11.2%	-10.4%	-9.7%	-9.0%	-8.2%
	D5	25	-24.8%	-24.1%	-23.3%	-22.6%	-21.8%	-21.1%	-20.4%	-19.6%	-18.9%	-18.2%	-17.4%	-16.7%	-16.0%	-15.2%	-14.5%	-13.8%	-13.0%	-12.3%	-11.6%	-10.8%	-10.1%	-9.4%	-8.6%

	SCz		FW →																						
			A1	A2	A3	A4	A5	B1	B2	B3	B4	B5	C1	C2	C3	C4	C5	D1	D2	D3	D4	D5	E1	E2	E3
			20	21	22	23	24	25	26	27	28	29	30	31	32	33	34	35	36	37	38	39	40	41	42
RW ↓	A1	6	85.3%	85.5%	85.8%	86.0%	86.3%	86.5%	86.8%	87.0%	87.3%	87.5%	87.8%	88.0%	88.3%	88.5%	88.8%	89.0%	89.3%	89.6%	89.8%	90.1%	90.3%	90.6%	90.8%
	A2	7	86.0%	86.3%	86.5%	86.8%	87.0%	87.3%	87.5%	87.7%	88.0%	88.2%	88.5%	88.7%	89.0%	89.2%	89.4%	89.7%	89.9%	90.2%	90.4%	90.7%	90.9%	91.2%	91.4%
	A3	8	86.8%	87.0%	87.3%	87.5%	87.7%	88.0%	88.2%	88.4%	88.7%	88.9%	89.1%	89.4%	89.6%	89.9%	90.1%	90.3%	90.6%	90.8%	91.0%	91.3%	91.5%	91.8%	92.0%
	A4	9	87.5%	87.8%	88.0%	88.2%	88.4%	88.7%	88.9%	89.1%	89.4%	89.6%	89.8%	90.1%	90.3%	90.5%	90.7%	91.0%	91.2%	91.4%	91.7%	91.9%	92.1%	92.4%	92.6%
	A5	10	88.3%	88.5%	88.7%	88.9%	89.2%	89.4%	89.6%	89.8%	90.1%	90.3%	90.5%	90.7%	90.9%	91.2%	91.4%	91.6%	91.8%	92.1%	92.3%	92.5%	92.7%	93.0%	93.2%
	B1	11	89.0%	89.2%	89.4%	89.7%	89.9%	90.1%	90.3%	90.5%	90.7%	91.0%	91.2%	91.4%	91.6%	91.8%	92.0%	92.3%	92.5%	92.7%	92.9%	93.1%	93.3%	93.6%	93.8%
	B2	12	89.8%	90.0%	90.2%	90.4%	90.6%	90.8%	91.0%	91.2%	91.4%	91.6%	91.9%	92.1%	92.3%	92.5%	92.7%	92.9%	93.1%	93.3%	93.5%	93.7%	94.0%	94.2%	94.4%
	B3	13	90.5%	90.7%	90.9%	91.1%	91.3%	91.5%	91.7%	91.9%	92.1%	92.3%	92.5%	92.7%	92.9%	93.1%	93.3%	93.5%	93.7%	93.9%	94.2%	94.4%	94.6%	94.8%	95.0%
	B4	14	91.2%	91.4%	91.6%	91.8%	92.0%	92.2%	92.4%	92.6%	92.8%	93.0%	93.2%	93.4%	93.6%	93.8%	94.0%	94.2%	94.4%	94.6%	94.8%	95.0%	95.2%	95.4%	95.6%
	B5	15	92.0%	92.2%	92.4%	92.6%	92.7%	92.9%	93.1%	93.3%	93.5%	93.7%	93.9%	94.1%	94.3%	94.4%	94.6%	94.8%	95.0%	95.2%	95.4%	95.6%	95.8%	96.0%	96.2%
	C1	16	92.7%	92.9%	93.1%	93.3%	93.5%	93.6%	93.8%	94.0%	94.2%	94.4%	94.6%	94.7%	94.9%	95.1%	95.3%	95.5%	95.7%	95.8%	96.0%	96.2%	96.4%	96.6%	96.7%
	C2	17	93.5%	93.7%	93.8%	94.0%	94.2%	94.4%	94.5%	94.7%	94.9%	95.1%	95.2%	95.4%	95.6%	95.8%	95.9%	96.1%	96.3%	96.5%	96.6%	96.8%	97.0%	97.2%	97.3%
	C3	18	94.2%	94.4%	94.6%	94.7%	94.9%	95.1%	95.2%	95.4%	95.6%	95.7%	95.9%	96.1%	96.2%	96.4%	96.6%	96.8%	96.9%	97.1%	97.3%	97.4%	97.6%	97.8%	97.9%
	C4	19	95.0%	95.1%	95.3%	95.5%	95.6%	95.8%	95.9%	96.1%	96.3%	96.4%	96.6%	96.7%	96.9%	97.1%	97.2%	97.4%	97.6%	97.7%	97.9%	98.0%	98.2%	98.4%	98.5%
	C5	20	95.7%	95.9%	96.0%	96.2%	96.3%	96.5%	96.6%	96.8%	97.0%	97.1%	97.3%	97.4%	97.6%	97.7%	97.9%	98.0%	98.2%	98.3%	98.5%	98.7%	98.8%	99.0%	99.1%
	D1	21	96.5%	96.6%	96.8%	96.9%	97.0%	97.2%	97.3%	97.5%	97.6%	97.8%	97.9%	98.1%	98.2%	98.4%	98.5%	98.7%	98.8%	99.0%	99.1%	99.3%	99.4%	99.6%	99.7%
	D2	22	97.2%	97.3%	97.5%	97.6%	97.8%	97.9%	98.0%	98.2%	98.3%	98.5%	98.6%	98.8%	98.9%	99.0%	99.2%	99.3%	99.5%	99.6%	99.7%	99.9%	100.0%	100.2%	100.3%
	D3	23	97.9%	98.1%	98.2%	98.3%	98.5%	98.6%	98.8%	98.9%	99.0%	99.2%	99.3%	99.4%	99.6%	99.7%	99.8%	100.0%	100.1%	100.2%	100.4%	100.5%	100.6%	100.8%	100.9%
	D4	24	98.7%	98.8%	98.9%	99.1%	99.2%	99.3%	99.5%	99.6%	99.7%	99.8%	100.0%	100.1%	100.2%	100.4%	100.5%	100.6%	100.7%	100.9%	101.0%	101.1%	101.2%	101.4%	101.5%
	D5	25	99.4%	99.6%	99.7%	99.8%	99.9%	100.0%	100.2%	100.3%	100.4%	100.5%	100.6%	100.8%	100.9%	101.0%	101.1%	101.2%	101.4%	101.5%	101.6%	101.7%	101.9%	102.0%	102.1%

	SCx		FW →																						
			A1	A2	A3	A4	A5	B1	B2	B3	B4	B5	C1	C2	C3	C4	C5	D1	D2	D3	D4	D5	E1	E2	E3
			20	21	22	23	24	25	26	27	28	29	30	31	32	33	34	35	36	37	38	39	40	41	42
RW ↓	A1	6	89.0%	89.3%	89.5%	89.7%	90.0%	90.2%	90.4%	90.7%	90.9%	91.1%	91.4%	91.6%	91.8%	92.1%	92.3%	92.5%	92.8%	93.0%	93.2%	93.5%	93.7%	93.9%	94.2%
	A2	7	89.9%	90.2%	90.4%	90.6%	90.8%	91.0%	91.3%	91.5%	91.7%	91.9%	92.1%	92.4%	92.6%	92.8%	93.0%	93.2%	93.5%	93.7%	93.9%	94.1%	94.4%	94.6%	94.8%
	A3	8	90.8%	91.1%	91.3%	91.5%	91.7%	91.9%	92.1%	92.3%	92.5%	92.7%	92.9%	93.1%	93.3%	93.6%	93.8%	94.0%	94.2%	94.4%	94.6%	94.8%	95.0%	95.2%	95.4%
	A4	9	91.8%	91.9%	92.1%	92.3%	92.5%	92.7%	92.9%	93.1%	93.3%	93.5%	93.7%	93.9%	94.1%	94.3%	94.5%	94.7%	94.9%	95.1%	95.3%	95.5%	95.7%	95.9%	96.1%
	A5	10	92.7%	92.8%	93.0%	93.2%	93.4%	93.6%	93.8%	93.9%	94.1%	94.3%	94.5%	94.7%	94.9%	95.1%	95.2%	95.4%	95.6%	95.8%	96.0%	96.2%	96.3%	96.5%	96.7%
	B1	11	93.6%	93.7%	93.9%	94.1%	94.3%	94.4%	94.6%	94.8%	94.9%	95.1%	95.3%	95.5%	95.6%	95.8%	96.0%	96.1%	96.3%	96.5%	96.7%	96.8%	97.0%	97.2%	97.3%
	B2	12	94.5%	94.6%	94.8%	95.0%	95.1%	95.3%	95.4%	95.6%	95.8%	95.9%	96.1%	96.2%	96.4%	96.5%	96.7%	96.9%	97.0%	97.2%	97.3%	97.5%	97.7%	97.8%	98.0%
	B3	13	95.4%	95.5%	95.7%	95.8%	96.0%	96.1%	96.3%	96.4%	96.6%	96.7%	96.9%	97.0%	97.2%	97.3%	97.4%	97.6%	97.7%	97.9%	98.0%	98.2%	98.3%	98.5%	98.6%
	B4	14	96.3%	96.4%	96.6%	96.7%	96.8%	97.0%	97.1%	97.2%	97.4%	97.5%	97.6%	97.8%	97.9%	98.0%	98.2%	98.3%	98.4%	98.6%	98.7%	98.8%	99.0%	99.1%	99.2%
	B5	15	97.2%	97.3%	97.5%	97.6%	97.7%	97.8%	97.9%	98.1%	98.2%	98.3%	98.4%	98.6%	98.7%	98.8%	98.9%	99.0%	99.2%	99.3%	99.4%	99.5%	99.6%	99.8%	99.9%
	C1	16	98.1%	98.2%	98.4%	98.5%	98.6%	98.7%	98.8%	98.9%	99.0%	99.1%	99.2%	99.3%	99.4%	99.5%	99.7%	99.8%	99.9%	100.0%	100.1%	100.2%	100.3%	100.4%	100.5%
	C2	17	99.0%	99.1%	99.2%	99.3%	99.4%	99.5%	99.6%	99.7%	99.8%	99.9%	100.0%	100.1%	100.2%	100.3%	100.4%	100.5%	100.6%	100.7%	100.8%	100.9%	101.0%	101.1%	101.2%
	C3	18	100.0%	100.0%	100.1%	100.2%	100.3%	100.4%	100.5%	100.5%	100.6%	100.7%	100.8%	100.9%	101.0%	101.0%	101.1%	101.2%	101.3%	101.4%	101.5%	101.5%	101.6%	101.7%	101.8%
	C4	19	100.9%	100.9%	101.0%	101.1%	101.2%	101.2%	101.3%	101.4%	101.4%	101.5%	101.6%	101.6%	101.7%	101.8%	101.9%	101.9%	102.0%	102.1%	102.1%	102.2%	102.3%	102.4%	102.4%
	C5	20	101.8%	101.8%	101.9%	102.0%	102.0%	102.1%	102.1%	102.2%	102.2%	102.3%	102.4%	102.4%	102.5%	102.5%	102.6%	102.7%	102.7%	102.8%	102.8%	102.9%	103.0%	103.0%	103.1%
	D1	21	102.7%	102.7%	102.8%	102.8%	102.9%	102.9%	103.0%	103.0%	103.1%	103.1%	103.2%	103.2%	103.2%	103.3%	103.3%	103.4%	103.4%	103.5%	103.5%	103.6%	103.6%	103.7%	103.7%
	D2	22	103.6%	103.6%	103.7%	103.7%	103.7%	103.8%	103.8%	103.8%	103.9%	103.9%	103.9%	104.0%	104.0%	104.0%	104.1%	104.1%	104.1%	104.2%	104.2%	104.2%	104.3%	104.3%	104.3%
	D3	23	104.5%	104.5%	104.6%	104.6%	104.6%	104.6%	104.6%	104.7%	104.7%	104.7%	104.7%	104.7%	104.8%	104.8%	104.8%	104.8%	104.9%	104.9%	104.9%	104.9%	104.9%	105.0%	105.0%
	D4	24	105.4%	105.4%	105.4%	105.5%	105.5%	105.5%	105.5%	105.5%	105.5%	105.5%	105.5%	105.5%	105.5%	105.5%	105.5%	105.6%	105.6%	105.6%	105.6%	105.6%	105.6%	105.6%	105.6%
	D5	25	106.3%	106.3%	106.3%	106.3%	106.3%	106.3%	106.3%	106.3%	106.3%	106.3%	106.3%	106.3%	106.3%	106.3%	106.3%	106.3%	106.3%	106.3%	106.3%	106.3%	106.3%	106.3%	106.3%

4.6.4 Wing Sensitivity, only lower front flaps on, with gurney flap (250mmx15mm) installed

			FW →																						
	Δ %F		A1	A2	A3	A4	A5	B1	B2	B3	B4	B5	C1	C2	C3	C4	C5	D1	D2	D3	D4	D5	E1	E2	E3
			20	21	22	23	24	25	26	27	28	29	30	31	32	33	34	35	36	37	38	39	40	41	42
RW ↓	A1	6	-15.2%	-14.4%	-13.7%	-13.0%	-12.3%	-11.6%	-10.8%	-10.1%	-9.4%	-8.7%	-7.9%	-7.2%	-6.5%	-5.8%	-5.1%	-4.3%	-3.6%	-2.9%	-2.2%	-1.4%	-0.7%	+0.0%	+0.7%
	A2	7	-15.5%	-14.8%	-14.1%	-13.3%	-12.6%	-11.9%	-11.2%	-10.5%	-9.7%	-9.0%	-8.3%	-7.6%	-6.9%	-6.1%	-5.4%	-4.7%	-4.0%	-3.3%	-2.6%	-1.8%	-1.1%	-0.4%	+0.3%
	A3	8	-15.8%	-15.1%	-14.4%	-13.7%	-13.0%	-12.3%	-11.5%	-10.8%	-10.1%	-9.4%	-8.7%	-8.0%	-7.2%	-6.5%	-5.8%	-5.1%	-4.4%	-3.7%	-2.9%	-2.2%	-1.5%	-0.8%	-0.1%
	A4	9	-16.2%	-15.5%	-14.7%	-14.0%	-13.3%	-12.6%	-11.9%	-11.2%	-10.5%	-9.7%	-9.0%	-8.3%	-7.6%	-6.9%	-6.2%	-5.5%	-4.8%	-4.0%	-3.3%	-2.6%	-1.9%	-1.2%	-0.5%
	A5	10	-16.5%	-15.8%	-15.1%	-14.4%	-13.7%	-13.0%	-12.2%	-11.5%	-10.8%	-10.1%	-9.4%	-8.7%	-8.0%	-7.3%	-6.6%	-5.9%	-5.1%	-4.4%	-3.7%	-3.0%	-2.3%	-1.6%	-0.9%
	B1	11	-16.8%	-16.1%	-15.4%	-14.7%	-14.0%	-13.3%	-12.6%	-11.9%	-11.2%	-10.5%	-9.8%	-9.1%	-8.4%	-7.6%	-6.9%	-6.2%	-5.5%	-4.8%	-4.1%	-3.4%	-2.7%	-2.0%	-1.3%
	B2	12	-17.2%	-16.5%	-15.8%	-15.1%	-14.4%	-13.7%	-12.9%	-12.2%	-11.5%	-10.8%	-10.1%	-9.4%	-8.7%	-8.0%	-7.3%	-6.6%	-5.9%	-5.2%	-4.5%	-3.8%	-3.1%	-2.4%	-1.7%
	B3	13	-17.5%	-16.8%	-16.1%	-15.4%	-14.7%	-14.0%	-13.3%	-12.6%	-11.9%	-11.2%	-10.5%	-9.8%	-9.1%	-8.4%	-7.7%	-7.0%	-6.3%	-5.6%	-4.9%	-4.2%	-3.5%	-2.8%	-2.1%
	B4	14	-17.8%	-17.1%	-16.4%	-15.7%	-15.0%	-14.4%	-13.7%	-13.0%	-12.3%	-11.6%	-10.9%	-10.2%	-9.5%	-8.8%	-8.1%	-7.4%	-6.7%	-6.0%	-5.3%	-4.6%	-3.9%	-3.2%	-2.5%
	B5	15	-18.2%	-17.5%	-16.8%	-16.1%	-15.4%	-14.7%	-14.0%	-13.3%	-12.6%	-11.9%	-11.2%	-10.5%	-9.8%	-9.1%	-8.4%	-7.8%	-7.1%	-6.4%	-5.7%	-5.0%	-4.3%	-3.6%	-2.9%
	C1	16	-18.5%	-17.8%	-17.1%	-16.4%	-15.7%	-15.1%	-14.4%	-13.7%	-13.0%	-12.3%	-11.6%	-10.9%	-10.2%	-9.5%	-8.8%	-8.1%	-7.4%	-6.7%	-6.1%	-5.4%	-4.7%	-4.0%	-3.3%
	C2	17	-18.8%	-18.2%	-17.5%	-16.8%	-16.1%	-15.4%	-14.7%	-14.0%	-13.3%	-12.6%	-12.0%	-11.3%	-10.6%	-9.9%	-9.2%	-8.5%	-7.8%	-7.1%	-6.4%	-5.8%	-5.1%	-4.4%	-3.7%
	C3	18	-19.2%	-18.5%	-17.8%	-17.1%	-16.4%	-15.8%	-15.1%	-14.4%	-13.7%	-13.0%	-12.3%	-11.6%	-10.9%	-10.3%	-9.6%	-8.9%	-8.2%	-7.5%	-6.8%	-6.1%	-5.5%	-4.8%	-4.1%
	C4	19	-19.5%	-18.8%	-18.1%	-17.5%	-16.8%	-16.1%	-15.4%	-14.7%	-14.1%	-13.4%	-12.7%	-12.0%	-11.3%	-10.6%	-10.0%	-9.3%	-8.6%	-7.9%	-7.2%	-6.5%	-5.9%	-5.2%	-4.5%
	C5	20	-19.9%	-19.2%	-18.5%	-17.8%	-17.1%	-16.5%	-15.8%	-15.1%	-14.4%	-13.7%	-13.1%	-12.4%	-11.7%	-11.0%	-10.3%	-9.7%	-9.0%	-8.3%	-7.6%	-6.9%	-6.2%	-5.6%	-4.9%
	D1	21	-20.2%	-19.5%	-18.8%	-18.2%	-17.5%	-16.8%	-16.1%	-15.4%	-14.8%	-14.1%	-13.4%	-12.7%	-12.1%	-11.4%	-10.7%	-10.0%	-9.4%	-8.7%	-8.0%	-7.3%	-6.6%	-6.0%	-5.3%
	D2	22	-20.5%	-19.8%	-19.2%	-18.5%	-17.8%	-17.2%	-16.5%	-15.8%	-15.1%	-14.5%	-13.8%	-13.1%	-12.4%	-11.8%	-11.1%	-10.4%	-9.7%	-9.1%	-8.4%	-7.7%	-7.0%	-6.4%	-5.7%
	D3	23	-20.9%	-20.2%	-19.5%	-18.8%	-18.2%	-17.5%	-16.8%	-16.2%	-15.5%	-14.8%	-14.1%	-13.5%	-12.8%	-12.1%	-11.5%	-10.8%	-10.1%	-9.4%	-8.8%	-8.1%	-7.4%	-6.8%	-6.1%
	D4	24	-21.2%	-20.5%	-19.9%	-19.2%	-18.5%	-17.9%	-17.2%	-16.5%	-15.8%	-15.2%	-14.5%	-13.8%	-13.2%	-12.5%	-11.8%	-11.2%	-10.5%	-9.8%	-9.2%	-8.5%	-7.8%	-7.2%	-6.5%
	D5	25	-21.5%	-20.9%	-20.2%	-19.5%	-18.9%	-18.2%	-17.5%	-16.9%	-16.2%	-15.5%	-14.9%	-14.2%	-13.5%	-12.9%	-12.2%	-11.6%	-10.9%	-10.2%	-9.6%	-8.9%	-8.2%	-7.6%	-6.9%

	SCz		FW →																						
			A1	A2	A3	A4	A5	B1	B2	B3	B4	B5	C1	C2	C3	C4	C5	D1	D2	D3	D4	D5	E1	E2	E3
			20	21	22	23	24	25	26	27	28	29	30	31	32	33	34	35	36	37	38	39	40	41	42
RW ↓	A1	6	88.5%	88.7%	88.9%	89.1%	89.4%	89.6%	89.8%	90.0%	90.2%	90.5%	90.7%	90.9%	91.1%	91.4%	91.6%	91.8%	92.0%	92.3%	92.5%	92.7%	92.9%	93.1%	93.4%
	A2	7	89.2%	89.4%	89.6%	89.9%	90.1%	90.3%	90.5%	90.7%	90.9%	91.2%	91.4%	91.6%	91.8%	92.0%	92.2%	92.5%	92.7%	92.9%	93.1%	93.3%	93.5%	93.7%	94.0%
	A3	8	90.0%	90.2%	90.4%	90.6%	90.8%	91.0%	91.2%	91.4%	91.6%	91.8%	92.0%	92.3%	92.5%	92.7%	92.9%	93.1%	93.3%	93.5%	93.7%	93.9%	94.1%	94.3%	94.6%
	A4	9	90.7%	90.9%	91.1%	91.3%	91.5%	91.7%	91.9%	92.1%	92.3%	92.5%	92.7%	92.9%	93.1%	93.3%	93.5%	93.7%	93.9%	94.1%	94.3%	94.5%	94.7%	94.9%	95.2%
	A5	10	91.4%	91.6%	91.8%	92.0%	92.2%	92.4%	92.6%	92.8%	93.0%	93.2%	93.4%	93.6%	93.8%	94.0%	94.2%	94.4%	94.6%	94.8%	95.0%	95.2%	95.4%	95.6%	95.7%
	B1	11	92.2%	92.4%	92.6%	92.8%	92.9%	93.1%	93.3%	93.5%	93.7%	93.9%	94.1%	94.3%	94.5%	94.6%	94.8%	95.0%	95.2%	95.4%	95.6%	95.8%	96.0%	96.2%	96.3%
	B2	12	92.9%	93.1%	93.3%	93.5%	93.7%	93.8%	94.0%	94.2%	94.4%	94.6%	94.8%	94.9%	95.1%	95.3%	95.5%	95.7%	95.8%	96.0%	96.2%	96.4%	96.6%	96.8%	96.9%
	B3	13	93.7%	93.9%	94.0%	94.2%	94.4%	94.6%	94.7%	94.9%	95.1%	95.3%	95.4%	95.6%	95.8%	96.0%	96.1%	96.3%	96.5%	96.7%	96.8%	97.0%	97.2%	97.4%	97.5%
	B4	14	94.4%	94.6%	94.8%	94.9%	95.1%	95.3%	95.4%	95.6%	95.8%	95.9%	96.1%	96.3%	96.4%	96.6%	96.8%	96.9%	97.1%	97.3%	97.5%	97.6%	97.8%	98.0%	98.1%
	B5	15	95.2%	95.3%	95.5%	95.7%	95.8%	96.0%	96.1%	96.3%	96.5%	96.6%	96.8%	96.9%	97.1%	97.3%	97.4%	97.6%	97.7%	97.9%	98.1%	98.2%	98.4%	98.6%	98.7%
	C1	16	95.9%	96.1%	96.2%	96.4%	96.5%	96.7%	96.8%	97.0%	97.1%	97.3%	97.5%	97.6%	97.8%	97.9%	98.1%	98.2%	98.4%	98.5%	98.7%	98.8%	99.0%	99.2%	99.3%
	C2	17	96.7%	96.8%	97.0%	97.1%	97.2%	97.4%	97.5%	97.7%	97.8%	98.0%	98.1%	98.3%	98.4%	98.6%	98.7%	98.9%	99.0%	99.2%	99.3%	99.5%	99.6%	99.8%	99.9%
	C3	18	97.4%	97.5%	97.7%	97.8%	98.0%	98.1%	98.2%	98.4%	98.5%	98.7%	98.8%	99.0%	99.1%	99.2%	99.4%	99.5%	99.7%	99.8%	99.9%	100.1%	100.2%	100.4%	100.5%
	C4	19	98.1%	98.3%	98.4%	98.5%	98.7%	98.8%	98.9%	99.1%	99.2%	99.4%	99.5%	99.6%	99.8%	99.9%	100.0%	100.2%	100.3%	100.4%	100.6%	100.7%	100.8%	101.0%	101.1%
	C5	20	98.9%	99.0%	99.1%	99.3%	99.4%	99.5%	99.7%	99.8%	99.9%	100.0%	100.2%	100.3%	100.4%	100.5%	100.7%	100.8%	100.9%	101.1%	101.2%	101.3%	101.4%	101.6%	101.7%
	D1	21	99.6%	99.8%	99.9%	100.0%	100.1%	100.2%	100.4%	100.5%	100.6%	100.7%	100.8%	101.0%	101.1%	101.2%	101.3%	101.4%	101.6%	101.7%	101.8%	101.9%	102.0%	102.2%	102.3%
	D2	22	100.4%	100.5%	100.6%	100.7%	100.8%	100.9%	101.1%	101.2%	101.3%	101.4%	101.5%	101.6%	101.7%	101.9%	102.0%	102.1%	102.2%	102.3%	102.4%	102.5%	102.7%	102.8%	102.9%
	D3	23	101.1%	101.2%	101.3%	101.4%	101.5%	101.7%	101.8%	101.9%	102.0%	102.1%	102.2%	102.3%	102.4%	102.5%	102.6%	102.7%	102.8%	102.9%	103.0%	103.2%	103.3%	103.4%	103.5%
	D4	24	101.9%	102.0%	102.1%	102.2%	102.3%	102.4%	102.5%	102.6%	102.7%	102.8%	102.9%	103.0%	103.1%	103.2%	103.3%	103.4%	103.5%	103.6%	103.7%	103.8%	103.9%	104.0%	104.1%
	D5	25	102.6%	102.7%	102.8%	102.9%	103.0%	103.1%	103.2%	103.3%	103.4%	103.4%	103.5%	103.6%	103.7%	103.8%	103.9%	104.0%	104.1%	104.2%	104.3%	104.4%	104.5%	104.6%	104.7%

	SCx		FW →																						
			A1	A2	A3	A4	A5	B1	B2	B3	B4	B5	C1	C2	C3	C4	C5	D1	D2	D3	D4	D5	E1	E2	E3
			20	21	22	23	24	25	26	27	28	29	30	31	32	33	34	35	36	37	38	39	40	41	42
RW ↓	A1	6	89.8%	90.0%	90.3%	90.5%	90.8%	91.1%	91.3%	91.6%	91.8%	92.1%	92.4%	92.6%	92.9%	93.1%	93.4%	93.7%	93.9%	94.2%	94.4%	94.7%	95.0%	95.2%	95.5%
	A2	7	90.7%	90.9%	91.2%	91.4%	91.7%	91.9%	92.2%	92.4%	92.6%	92.9%	93.1%	93.4%	93.6%	93.9%	94.1%	94.4%	94.6%	94.9%	95.1%	95.4%	95.6%	95.9%	96.1%
	A3	8	91.6%	91.8%	92.0%	92.3%	92.5%	92.8%	93.0%	93.2%	93.5%	93.7%	93.9%	94.2%	94.4%	94.6%	94.9%	95.1%	95.3%	95.6%	95.8%	96.0%	96.3%	96.5%	96.7%
	A4	9	92.5%	92.7%	92.9%	93.2%	93.4%	93.6%	93.8%	94.0%	94.3%	94.5%	94.7%	94.9%	95.2%	95.4%	95.6%	95.8%	96.0%	96.3%	96.5%	96.7%	96.9%	97.2%	97.4%
	A5	10	93.4%	93.6%	93.8%	94.0%	94.2%	94.5%	94.7%	94.9%	95.1%	95.3%	95.5%	95.7%	95.9%	96.1%	96.3%	96.5%	96.8%	97.0%	97.2%	97.4%	97.6%	97.8%	98.0%
	B1	11	94.3%	94.5%	94.7%	94.9%	95.1%	95.3%	95.5%	95.7%	95.9%	96.1%	96.3%	96.5%	96.7%	96.9%	97.1%	97.3%	97.5%	97.7%	97.9%	98.1%	98.3%	98.5%	98.7%
	B2	12	95.2%	95.4%	95.6%	95.8%	96.0%	96.1%	96.3%	96.5%	96.7%	96.9%	97.1%	97.3%	97.4%	97.6%	97.8%	98.0%	98.2%	98.4%	98.6%	98.7%	98.9%	99.1%	99.3%
	B3	13	96.1%	96.3%	96.5%	96.7%	96.8%	97.0%	97.2%	97.3%	97.5%	97.7%	97.9%	98.0%	98.2%	98.4%	98.5%	98.7%	98.9%	99.1%	99.2%	99.4%	99.6%	99.8%	99.9%
	B4	14	97.0%	97.2%	97.4%	97.5%	97.7%	97.8%	98.0%	98.2%	98.3%	98.5%	98.6%	98.8%	99.0%	99.1%	99.3%	99.4%	99.6%	99.8%	99.9%	100.1%	100.2%	100.4%	100.6%
	B5	15	98.0%	98.1%	98.3%	98.4%	98.5%	98.7%	98.8%	99.0%	99.1%	99.3%	99.4%	99.6%	99.7%	99.9%	100.0%	100.2%	100.3%	100.5%	100.6%	100.8%	100.9%	101.1%	101.2%
	C1	16	98.9%	99.0%	99.1%	99.3%	99.4%	99.5%	99.7%	99.8%	99.9%	100.1%	100.2%	100.4%	100.5%	100.6%	100.8%	100.9%	101.0%	101.2%	101.3%	101.4%	101.6%	101.7%	101.8%
	C2	17	99.8%	99.9%	100.0%	100.1%	100.3%	100.4%	100.5%	100.6%	100.8%	100.9%	101.0%	101.1%	101.3%	101.4%	101.5%	101.6%	101.7%	101.9%	102.0%	102.1%	102.2%	102.4%	102.5%
	C3	18	100.7%	100.8%	100.9%	101.0%	101.1%	101.2%	101.4%	101.5%	101.6%	101.7%	101.8%	101.9%	102.0%	102.1%	102.2%	102.3%	102.5%	102.6%	102.7%	102.8%	102.9%	103.0%	103.1%
	C4	19	101.6%	101.7%	101.8%	101.9%	102.0%	102.1%	102.2%	102.3%	102.4%	102.5%	102.6%	102.7%	102.8%	102.9%	103.0%	103.1%	103.2%	103.3%	103.4%	103.5%	103.6%	103.6%	103.7%
	C5	20	102.5%	102.6%	102.7%	102.8%	102.9%	102.9%	103.0%	103.1%	103.2%	103.3%	103.4%	103.5%	103.5%	103.6%	103.7%	103.8%	103.9%	104.0%	104.0%	104.1%	104.2%	104.3%	104.4%
	D1	21	103.4%	103.5%	103.6%	103.6%	103.7%	103.8%	103.9%	103.9%	104.0%	104.1%	104.2%	104.2%	104.3%	104.4%	104.4%	104.5%	104.6%	104.7%	104.7%	104.8%	104.9%	104.9%	105.0%
	D2	22	104.3%	104.4%	104.5%	104.5%	104.6%	104.6%	104.7%	104.8%	104.8%	104.9%	104.9%	105.0%	105.1%	105.1%	105.2%	105.2%	105.3%	105.4%	105.4%	105.5%	105.5%	105.6%	105.7%
	D3	23	105.3%	105.3%	105.3%	105.4%	105.4%	105.5%	105.5%	105.6%	105.6%	105.7%	105.7%	105.8%	105.8%	105.9%	105.9%	106.0%	106.0%	106.1%	106.1%	106.2%	106.2%	106.2%	106.3%
	D4	24	106.2%	106.2%	106.2%	106.3%	106.3%	106.3%	106.4%	106.4%	106.4%	106.5%	106.5%	106.5%	106.6%	106.6%	106.7%	106.7%	106.7%	106.8%	106.8%	106.8%	106.9%	106.9%	106.9%
	D5	25	107.1%	107.1%	107.1%	107.1%	107.2%	107.2%	107.2%	107.2%	107.3%	107.3%	107.3%	107.3%	107.3%	107.4%	107.4%	107.4%	107.4%	107.5%	107.5%	107.5%	107.5%	107.5%	107.6%

4.7 DIFFUSER

Due to different tires sizes between Championships, the tires cut-out on the diffuser can differ from one Championship to other. Check that the cut-out follows the Championship rules, a jig will be available at the Tatuus' and Championship Organizer's truck.

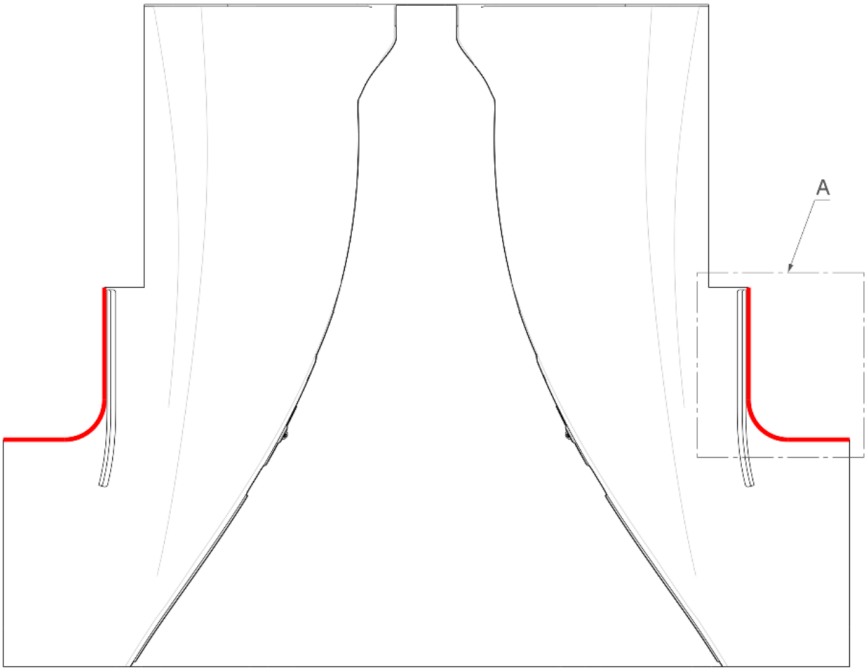

In case of damages to the spat fins (pn. 2402017003/004), spares are available. The spare must be bonded to the diffuser following the position shown below, referring to the Rear Wheel axis and the underfloor external side:

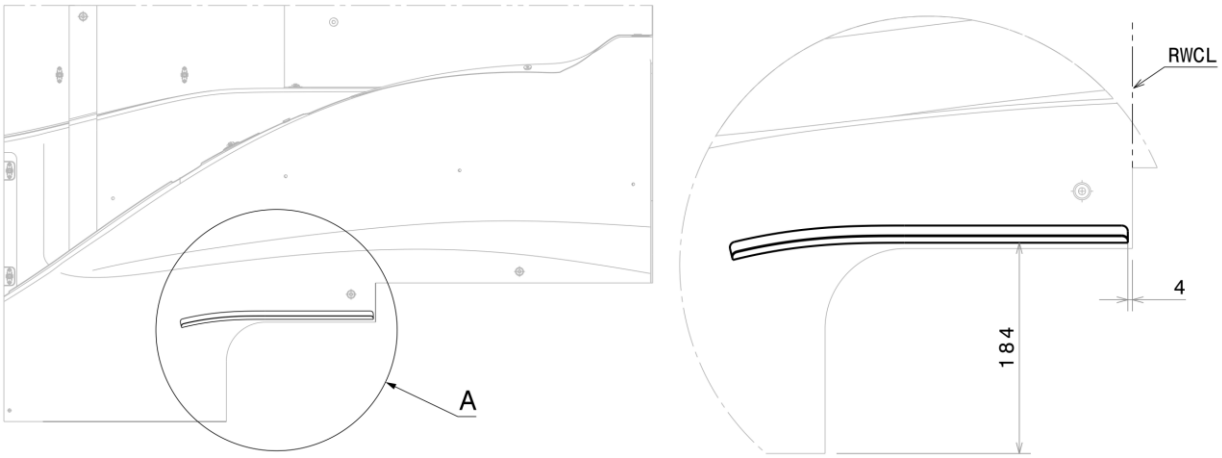

TATUUS discourages to refer to the tire cut-out side as its shape is depending on the Championship.

5 SUSPENSIONS

5.1 MEASUREMENT STANDARD

REFERENCE PLANE: it is the plane where skid block and wooden plank are in contact, the skid block is then the only suspended part of the car sitting below this plane.
RIDE HEIGHT: it is measured at the intersection between the vertical plane passing through the axle and the vehicle center line. Zero when reference plane is coincident with ground, positive change when the car is raised.
TOE: Zero when wheels are parallel, positive change when toe-out.
CAMBER: Zero when wheels are vertical, positive change when the top of the wheel is outward
CASTOR: Zero when steering axis is vertical, positive change when the contact patch is behind the intersection of steering axis and ground.

5.2 GEOMETRY ADJUSTMENTS

5.2.1 Ride height adjustment

Front ride height is increased adding the shims ① into the front push-rod, the following tables represents the available size and its respective effect:

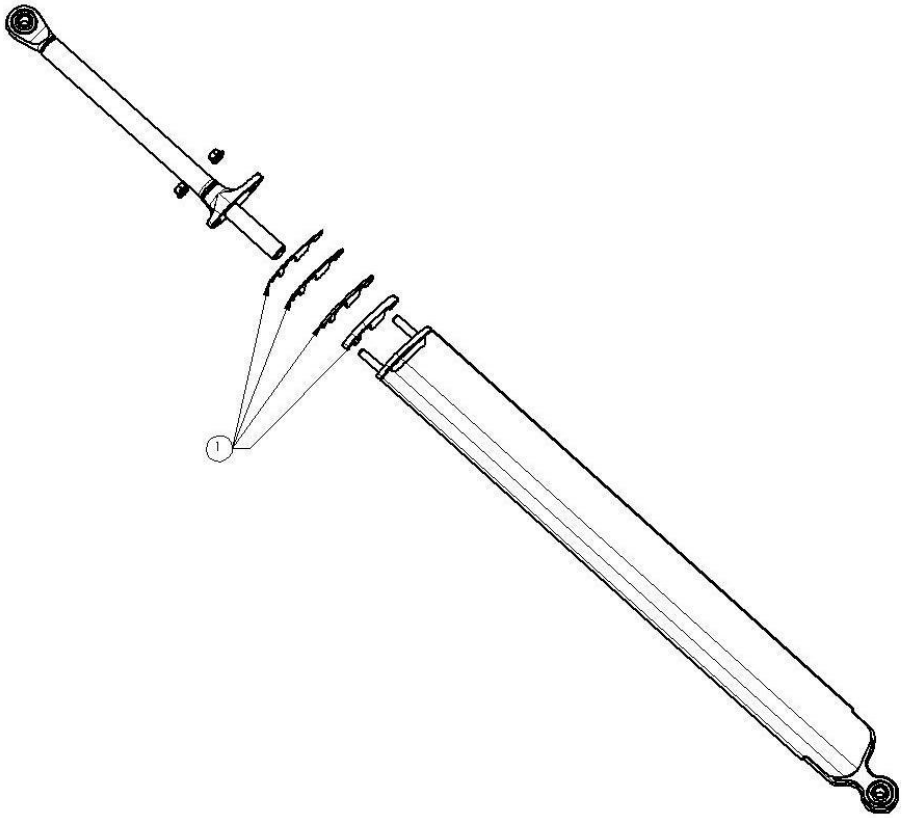

Ride height adjustment	Front Ride Height change	Rear Ride Height change
+1mm	+2.7mm	+3.2mm

5.2.2 Camber adjustment

Front camber is set changing the shims stack between Ackermann and upright:

Camber adjust-ment	Front		Rear	
	Camber change		**Camber change**	**Toe Change**
+1 mm	+0.43 deg (+25’)		+0.31 deg (+18’)	+0.55 deg (+33’)

5.2.3 Toe adjustment

Toe can be adjusted by the steering arm length

Toe adjustment	Front		Rear	
	Total Toe Change		**Total Toe Change**	
+1 turn	+1.18 deg (+1°10’)		+2.59 deg (+1°35’)	

5.2.4 Caster adjustment

The apparent caster is measured on the top of the front upright (when steer angle is zero), measuring an angle of 0° (parallel) to the reference plane equals to 10° of caster angle.

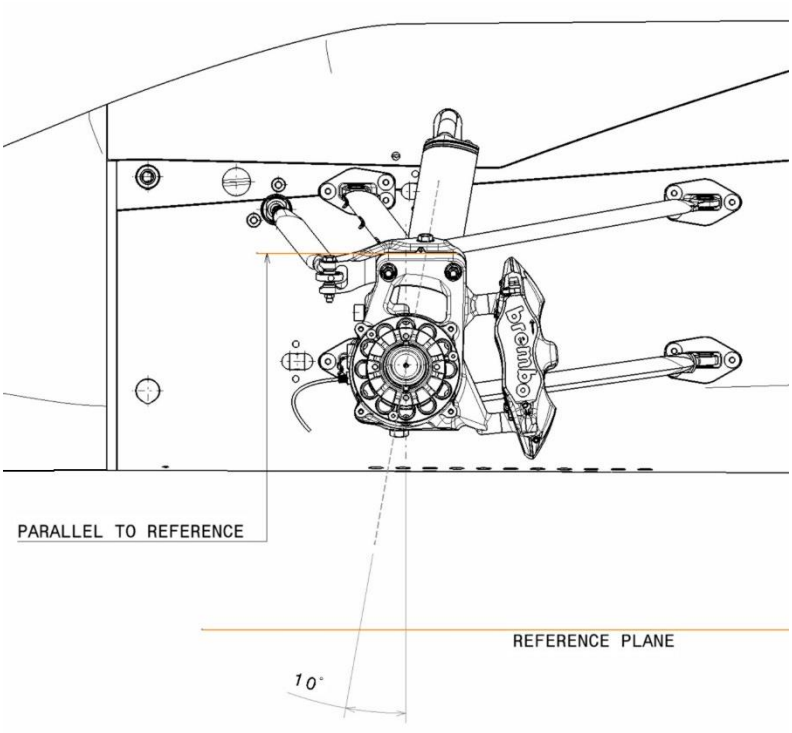

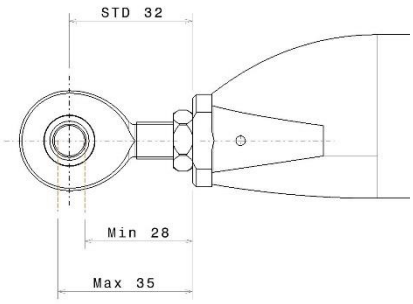

Caster adjustment	Front		Rear	
	Caster Change			
+1turn	+0.90 deg (+54')			

5.2.5 UMP adjustment

The front pushrod is directly installed on the upright, its pick-up point can be adjusted longitudinally resulting in a different weight transfer as function of the steering angle.
The farthest the point is from steer axis the higher will be the weight transfer and by consequence the steering effort.
The following diagrams summarize the possible configuration and the distance pickup to steering axis.

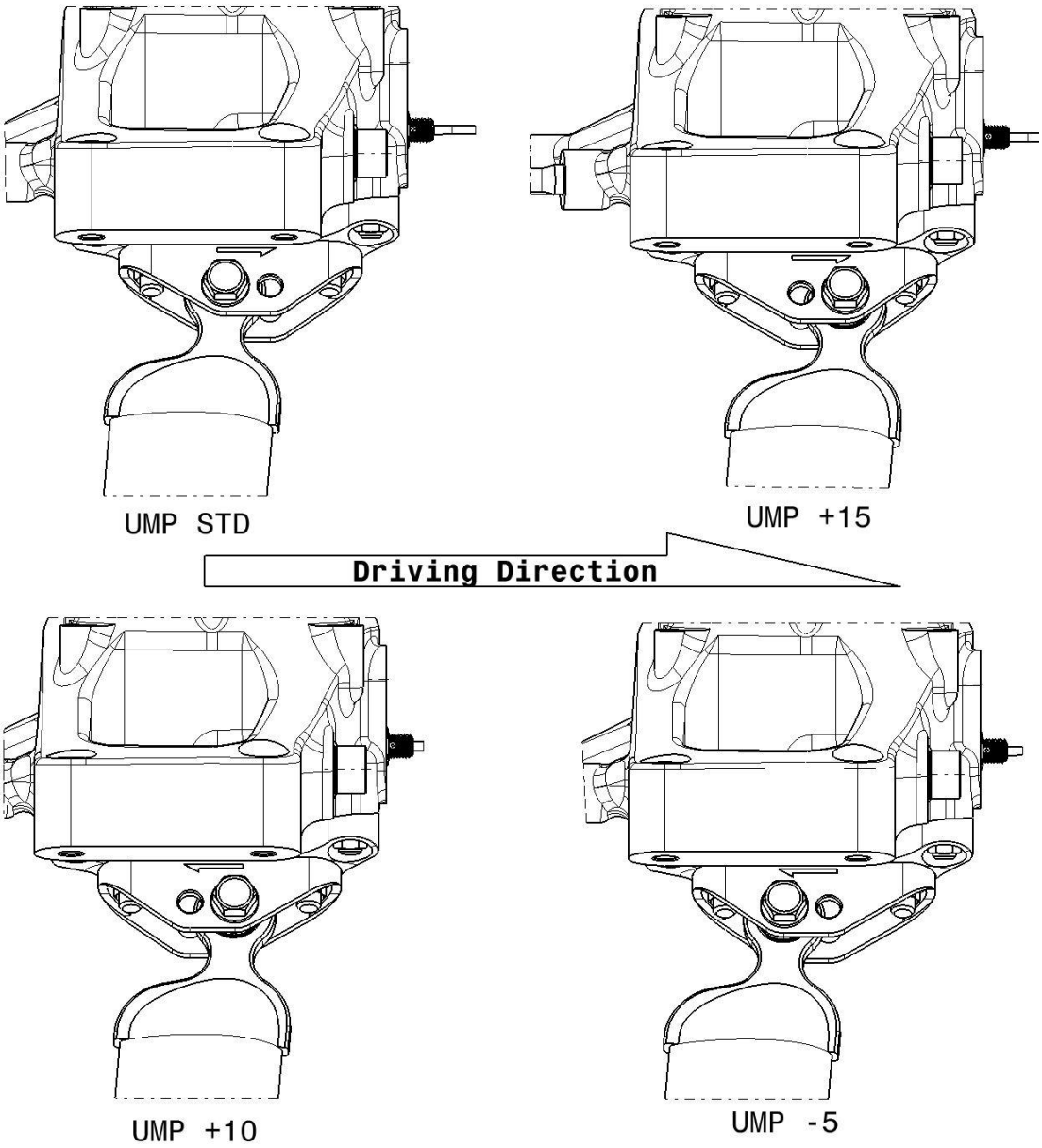

5.3 VERTICAL STIFFNESS

5.3.1 Front vertical stiffness

The table below resumes stiffness options available and relevant stiffness at the wheel:

Spring stiffness [lb/in]	700	900	1100	1300
Ground stiffness [daN/mm]	12.0	15.4	18.9	22.3

Motion ratio (wheel/damper): 1.02
Springs can be preloaded acting on the damper/spring platform, the pitch of the thread is 2mm.

5.3.2 Rear vertical stiffness

The table below resumes stiffness options available:

Spring stiffness [lb/in]	700	900	1100	1300
Ground stiffness [daN/mm]	8.5	11.0	13.4	15.9

Motion ratio (wheel/damper): 1.21
Springs can be preloaded acting on the damper/spring platform, the pitch of the thread is 2mm.

5.4 DAMPERS

The standard damper is the KONI 2812, full open length is 320mm and maximum stroke is 44mm.

Rotating the adjustment discs, located in the window of the top eye, adjust the damping. You only need a steel pin adjustment tool of 1.5mm diameter. The adjusters are marked with letters that are visible on the alloy top eye, with a 'B' for bump and an 'R' for rebound next to the corresponding disc.
The bump and rebound discs are also recognizable at their color. The bump disc is colored black and the rebound discs is colored red. Rotate the discs according to the markings on the top eye.
The adjusters have 8 distinct stops (clicks), each of which marks an adjustment position.
There is a total of 8 adjustment positions from minimum to maximum adjustment.
The minimum position is referred to as position 1 and the maximum adjustment position as position 8.
The adjusters have a positive stop at the minimum and maximum position.
Never use excessive force while adjusting.

Front reference:	2812 030 769
Front valving:	
Bump cartridge:	71 60 21 967 0
Rebound cartridge:	71 60 22 938 0
Mainvalve:	71 60 25 974 0
Pgas:	15 bar

Rear reference:	2812 030 932
Rear valving:	
Bump cartridge:	71 60 21 932 0
Rebound cartridge:	71 60 22 932 0
Mainvalve:	71 60 25 140 0
Pgas:	15 bar

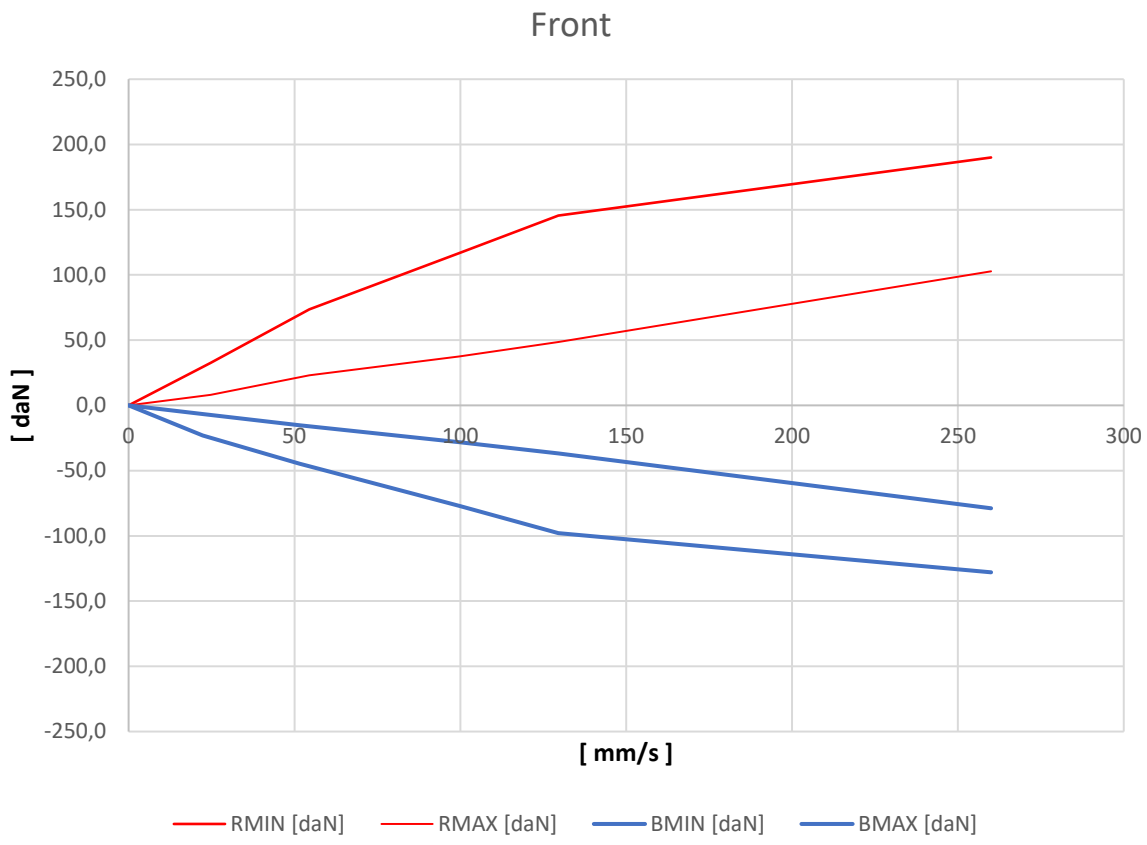
Front
250,0
200,0
150,0
100,0
50,0
0,0
-50,0
-100,0
-150,0
-200,0
-250,0
[daN]
0
50
100
150
200
250
300
[mm/s]
RMIN [daN]
RMAX [daN]
BMIN [daN]
BMAX [daN]

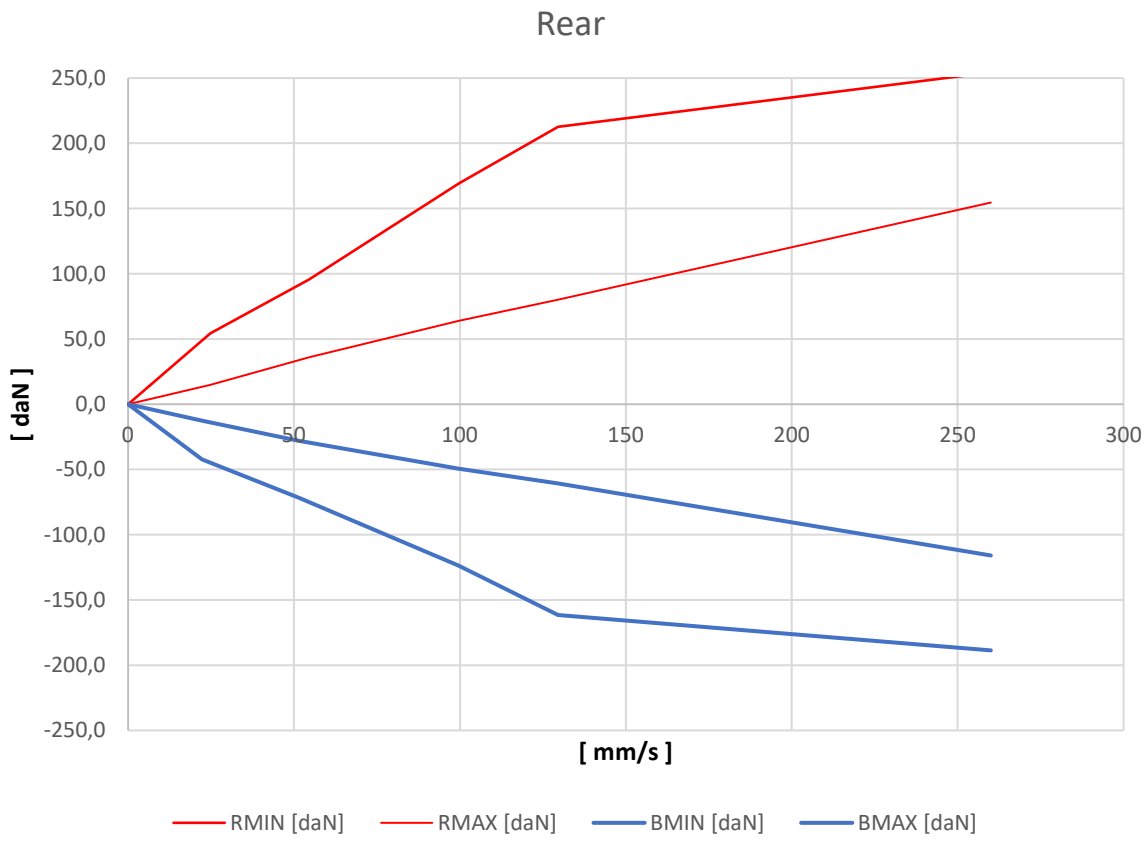
Rear
250,0
200,0
150,0
100,0
50,0
0,0
-50,0
-100,0
-150,0
-200,0
-250,0
[daN]
0
50
100
150
200
250
300
[mm/s]
RMIN [daN]
RMAX [daN]
BMIN [daN]
BMAX [daN]

5.5 ROLLING STIFFNESS

5.5.1 Front roll stiffness

The motion ratio of the front anti-roll bar is:

Blade length [mm]	100	90	80
$\phi_{Anti\text{-}rollbar}$/ $\phi_{Chassis}$ [°/°]	12.8	14.2	15.9

The ratio represents the torsion angle of the antiroll bar resulting from a roll of 1° on the chassis.

The following table summarizes anti-roll bar options available:

Rollbar diameter [mm]	18.7			22.5		
Blade length [mm]	100	90	80	100	90	80
ARbar Torsion stiffness [daN*mm/°]	7300			11700		
Roll stiffness (@ ground) [daN*m/deg]	1200	1470	1852	1920	2370	2990

5.5.2 Rear roll stiffness

The motion ratio of the front anti-roll bar is:

Blade length [mm]	80	70	60
$\phi_{Anti\text{-}rollbar}$/ $\phi_{Chassis}$ [°/°]	14.6	16.7	19.4

The ratio represents the torsion angle of the antiroll bar resulting from a roll of 1° on the chassis.

The following table summarizes anti-roll bar options available:

Rollbar diameter [mm]	10.0			12.0		
Blade length [mm]	80	70	60	80	70	60
ARbar Torsion stiffness [daN*mm/°]	850			1765		
Roll stiffness (@ ground) [daN*m/deg]	182	240	320	377	490	665

5.6 SUSPENSION GEOMETRY

5.6.1 Front suspension geometry

The origin is located at the intersection of front wheel axle and reference plane, the coordinate of the contact point is then below the reference plane by a value of Rd-Zn where Rd is the Rolling Radius of the tire and Zn is the z coordinate of point N.

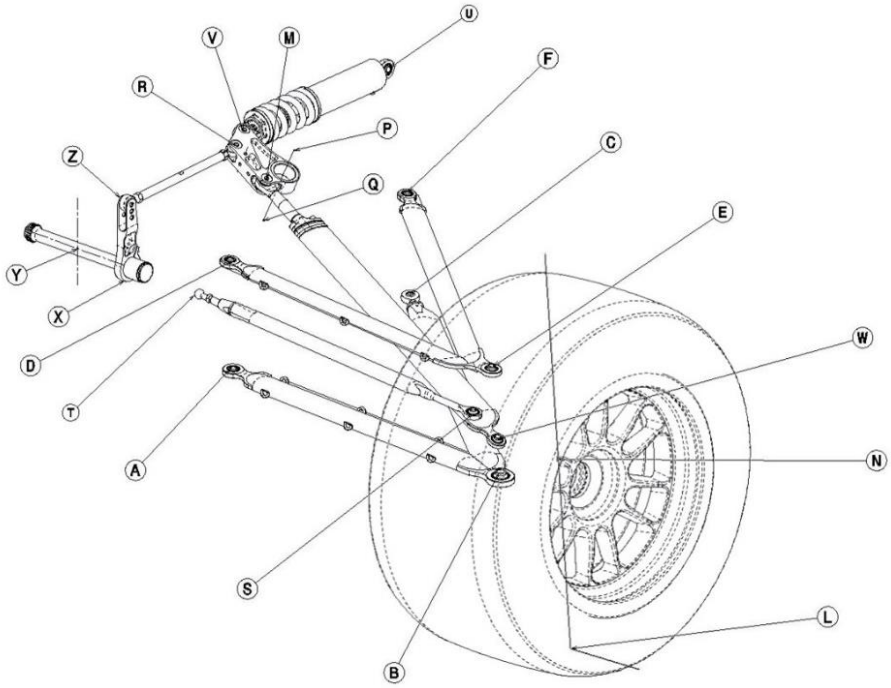

	X	Y	Z
A	-50.0	179.4	269
B	-6.9	663.9	225
C	300.0	196.2	271
D	-50.0	179.4	440
E	19.5	626.6	375
F	300.0	196.2	429
S	-85.1	683.3	354
T	-130.0	195.0	422
H	0.0	775.6	262
L	0.0	787.5	R_d-Z_N
N	0.0	787.5	262
U	383.6	80.0	567
V	83.8	81.0	566
P	80.0	163.0	525
Q	80.0	140.3	480
M	45.1	160.6	526
W	2.1	651.2	276
X	-185.0	95.0	450
Y	-185.0	0.0	450
Z	-185.0	95.0	550

R	51.3	96.5	559

5.6.2 Rear suspension geometry

Pickup nomenclature according to the following image

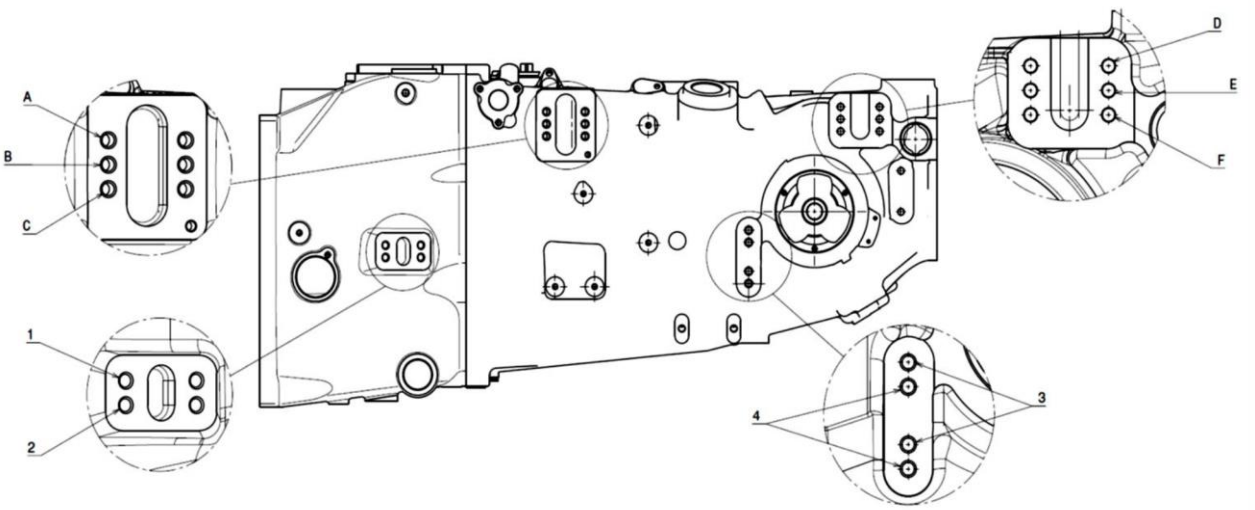

The vertical step between pickup point is 12.5mm, standard configuration BE-24.
The following table summarize the pickup point coordinates of the standard configuration (BE-24), the origin is located at the intersection of rear wheel axle and reference plane, the coordinate of the contact point is then below the reference plane by a value of Rd-Zn where Rd is the Rolling Radius of the tire and Zn is the z coordinate of point N.

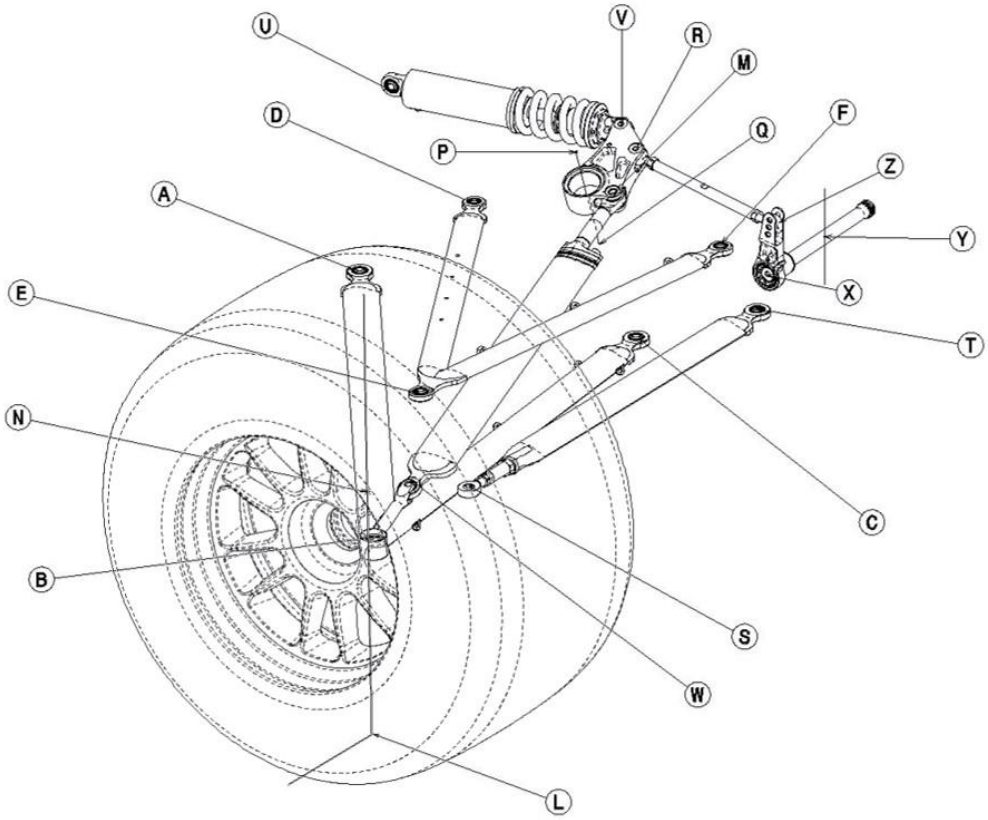

	ALFA			RENAULT		
	X	Y	Z	X	Y	Z
A	-450.0	170.0	164.9	-450.0	170.0	159.9
B	-40.3	694.8	158.3	-40.3	694.8	153.3
C	-86.0	119.4	159.3	-86.0	119.4	154.3
D	-280.4	163.3	301.4	-280.4	163.3	296.4
E	-15.0	626.3	331.8	-15.0	626.3	326.8
F	34.0	108.0	306.4	34.0	108.0	301.4
S	75.0	659.8	246.8	75.0	659.8	241.8
T	78.0	101.0	232.5	78.0	101.0	227.5
H	0.0	750.3	234.6	0.0	750.3	229.6
L	0.0	765.0	R_d-Z_N	0.0	765.0	R_d-Z_N
N	0.0	765.0	235.0	0.0	765.0	230.0
U	-435.0	106.0	389.7	-435.0	106.0	384.7
V	-144.0	52.9	386.6	-144.0	52.9	381.6
P	-130.0	145.1	353.5	-130.0	145.1	348.5
Q	-137.0	112.4	259.3	-137.0	112.4	254.3
M	-92.2	141.4	352.0	-92.2	141.4	347.0
W	-53.1	607.6	187.1	-53.1	607.6	182.1
X	94.0	100.0	286.0	94.0	100.0	281.0
Y	94.0	0.0	286.0	94.0	0.0	281.0
Z	106.2	100.0	354.9	106.2	100.0	349.9

R	-105.8	76.6	375.5	-105.8	76.6	370.5

5.6.2.1 Anti-effects

The following tables shows the anti-effects of the vehicle, they show the relevant numbers for the following setting:

Front wheel hub: 262mm over reference plane
Rear wheel hub: 235mm over reference plane
Brake bias: 55% Front

5.6.2.1.1 Front

Pick Up position	RC Height [mm]	Camber derivative [°/10mm]	Anti-dive [%]
STD	-27	-0.20	37%

5.6.2.1.2 Rear

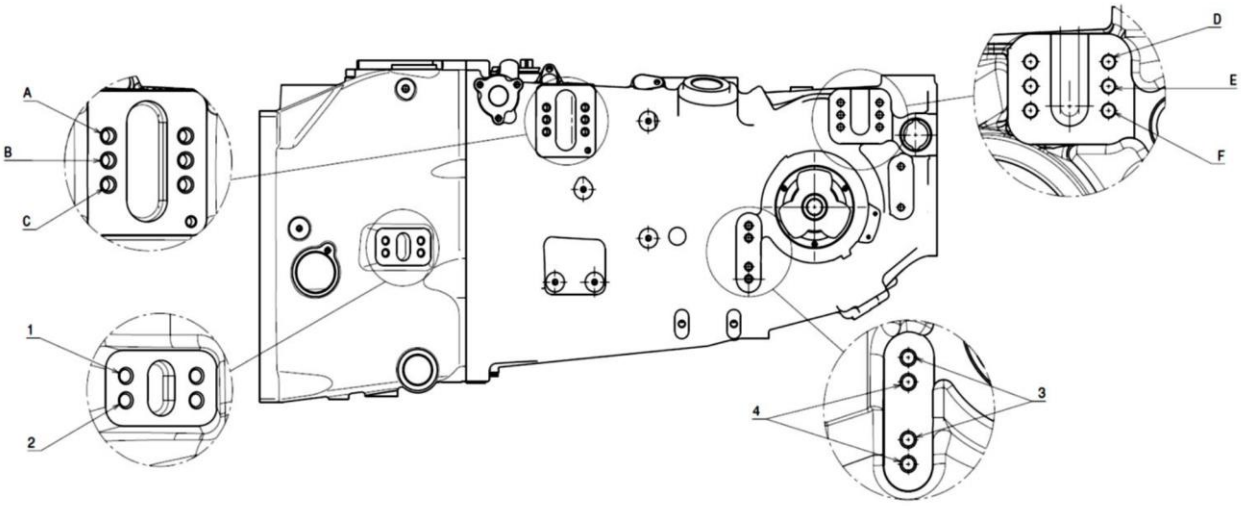

Pick Up position	RC Height [mm]	Camber derivative [°/10mm]	Anti-squat [%]	Anti-lift [%]
AD13	58.48	0.13	1%	31%
AD14	19.39	0.07	20%	63%
AD23	63.40	0.14	-19%	-5%
AD24	24.06	0.07	0%	28%
AE13	75.47	0.21	18%	10%
AE14	62.16	0.25	-2%	88%
AE23	80.53	0.22	-2%	-25%
AE24	41.54	0.15	17%	8%
BD13	61.47	0.15	-18%	52%
BD14	22.52	0.08	1%	84%
BD23	66.41	0.16	-38%	18%
BD24	27.22	0.09	-19%	50%
BE13	78.27	0.22	0%	32%
BE14	39.67	0.15	19%	64%
BE23	83.39	0.23	-21%	-3%
BE24	44.55	0.16	-2%	30%
BF13	94.66	0.29	17%	13%
BF14	56.38	0.22	36%	45%
BF23	99.94	0.30	-5%	-22%
BF24	61.44	0.23	15%	10%
CE13	81.08	0.23	-19%	54%
CE14	42.62	0.16	0%	85%
CE23	86.22	0.24	-40%	19%
CE24	30.33	0.10	-37%	72%
CF13	97.33	0.30	-2%	34%
CF14	59.19	0.24	18%	66%
CF23	102.63	0.31	-23%	0%
CF24	64.26	0.24	-3%	32%

5.7 SUSPENSION MAINTENANCE

5.7.1 Upright Maintenance

WARNING: while undoing toe and bottom brackets of the rear upright the technicians should be careful not undoing the studs (item ⑥, ⑦).

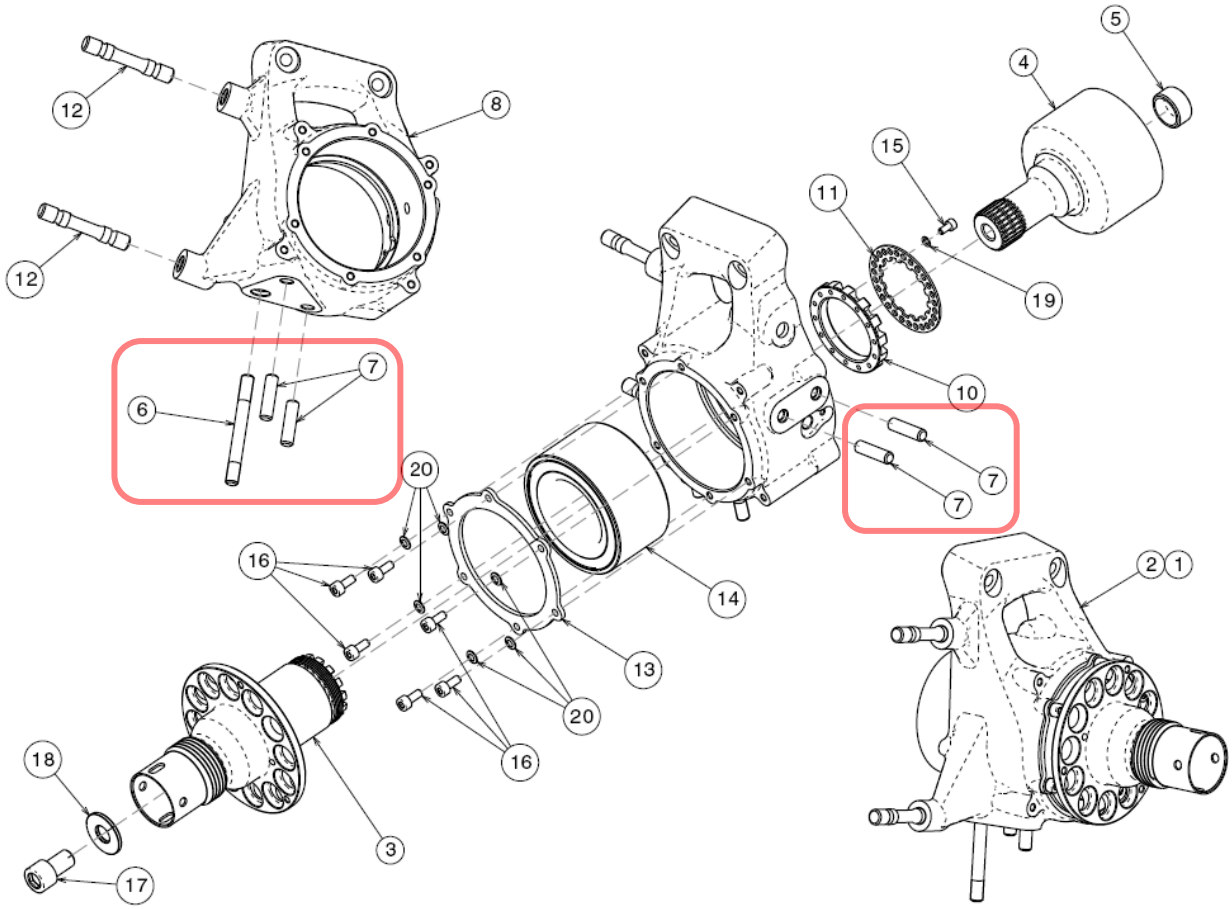

In order to reduce the wear at the link with the lower wishbone, a modification of the rear upright has been developed:

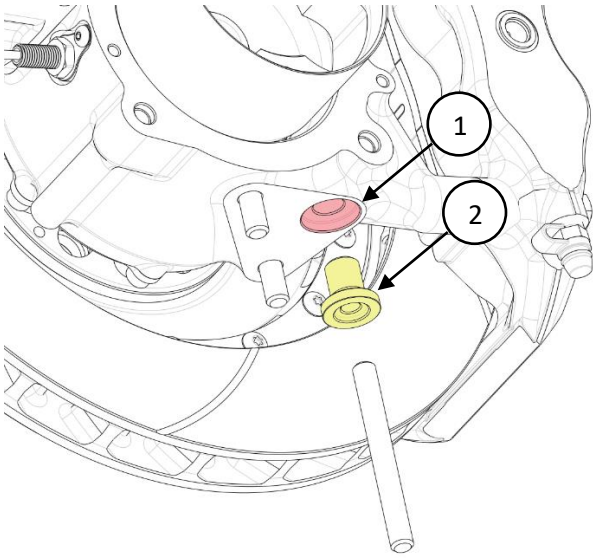

The upgrade consists in the installation of a bush ②.

This upgrade has been implemented in the production parts.

To upgrade an old spec rear upright please contact TATUUS, as the teams are not allowed to make this modification on their own.

5.7.2 Upright Disassembly

The upright can be disassembled for inspection:

1. Remove the secure ring [f].

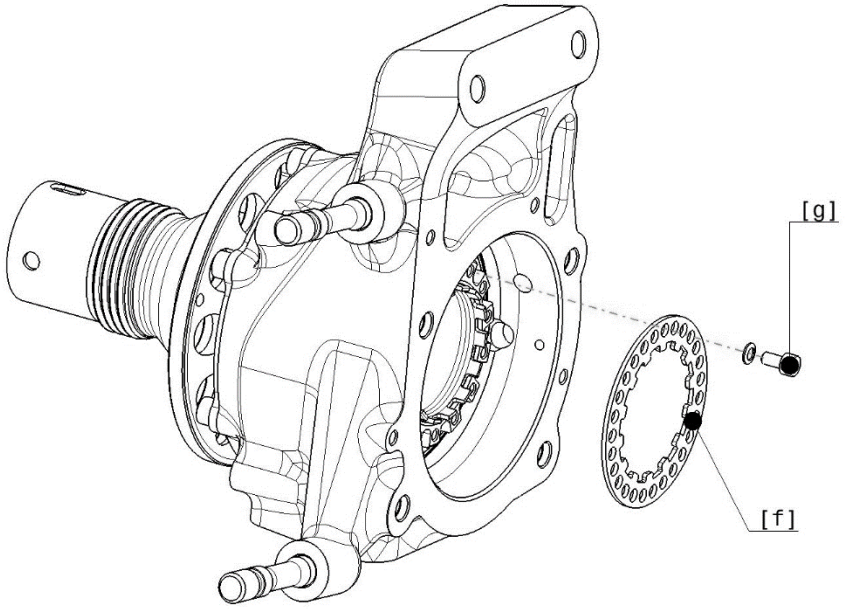

2. Apply unlock spray.
3. Using the special tool [e] (pn. 2491011, available on Spare Part Catalogue), unscrew and remove the ring nut [d].

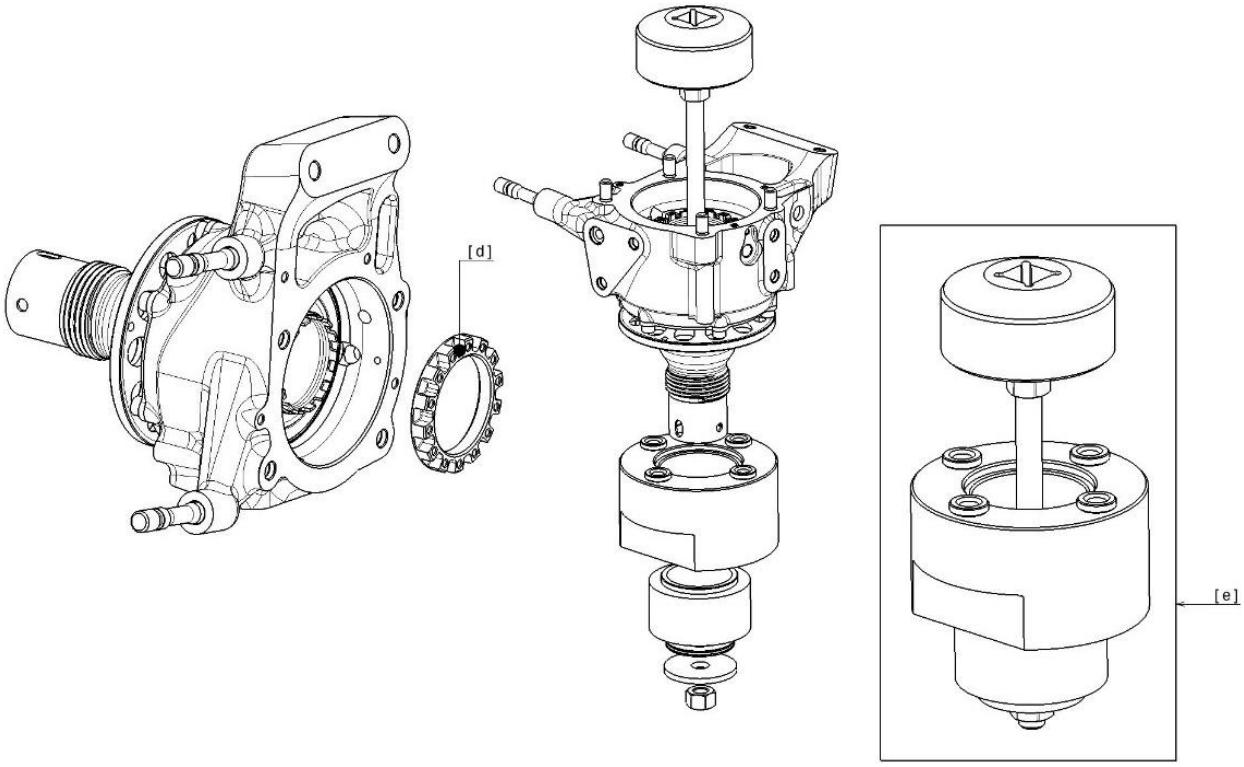

4. Press the hub out. Is suggested to do this operation with a hydraulic press. Pictures below shows the procedure using a TATUUS' special tool available upon request.
   To avoid buckling and misalignment problems the procedure should be done with the pins as short as possible in the very first phase of stroke. Once the first part of extraction stroke switch to longer pins and complete the extraction. Different lengths of the pins should be used during the extraction. Do not heat the upright assembly before removing the hub. Cooling the hub (only the hub) before pressing out, i.e. filling it with dry ice, could make the extraction easier.

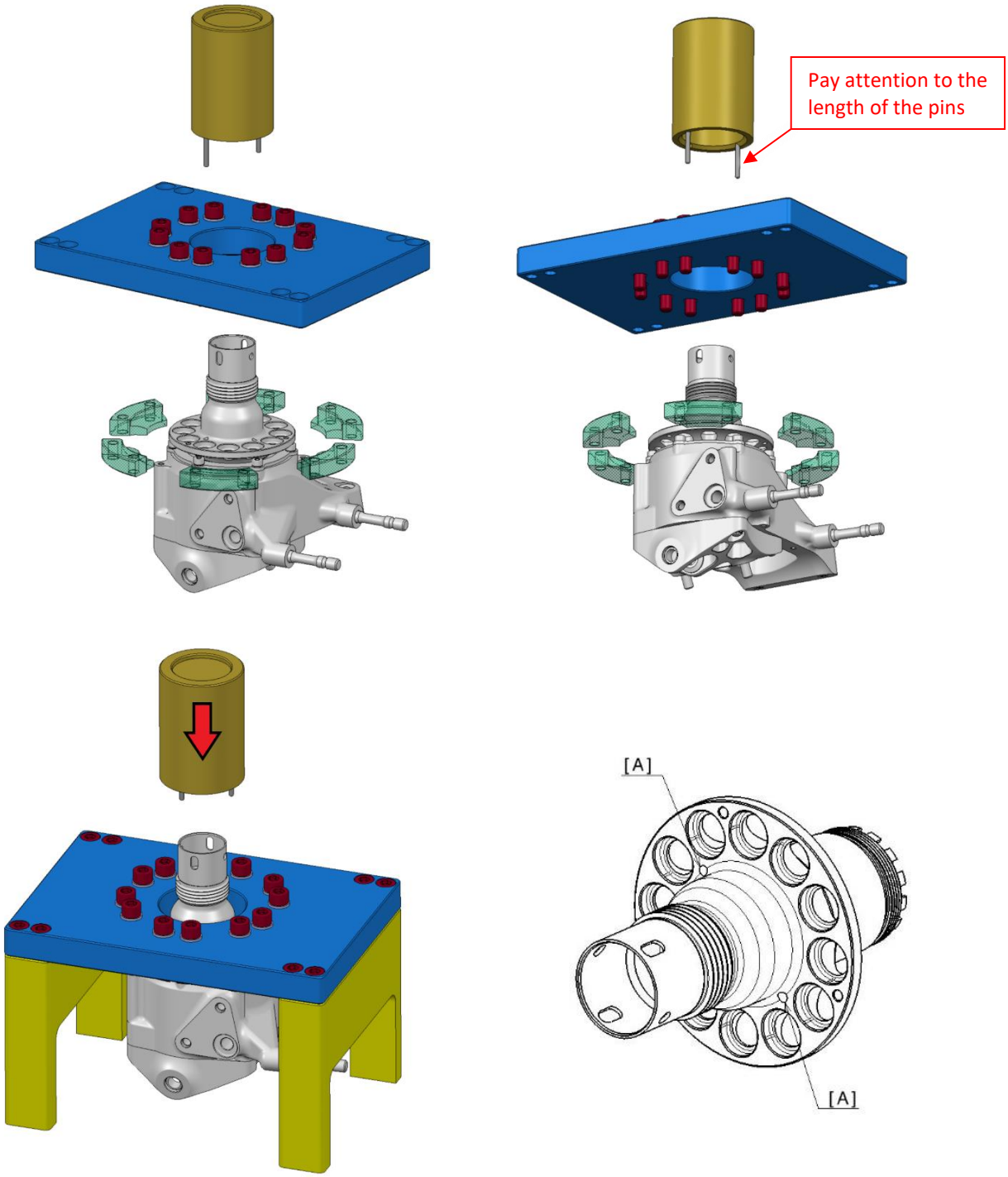

5. For the final phase of the extraction remove the hub with a drift punch through the 4mm holes [A].

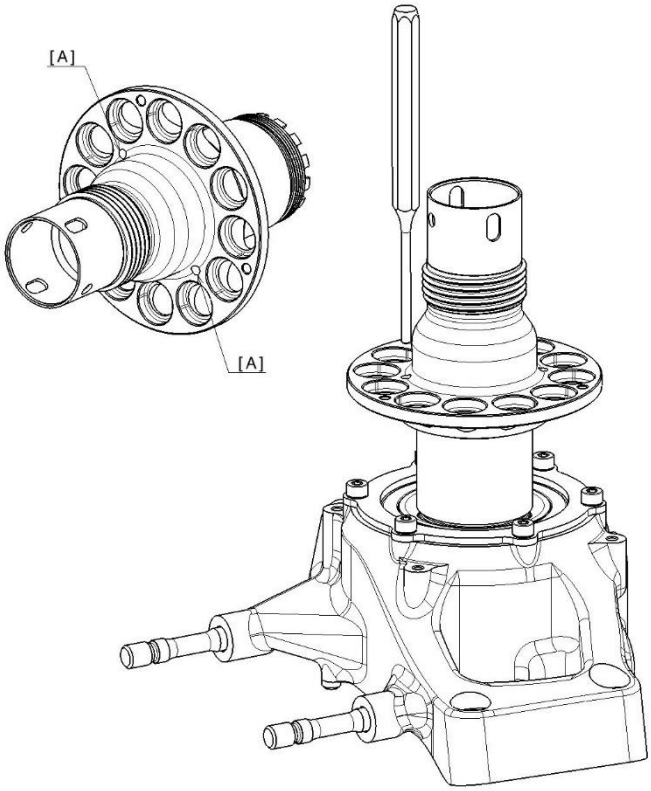

6. Remove the bearing retention ring (a).

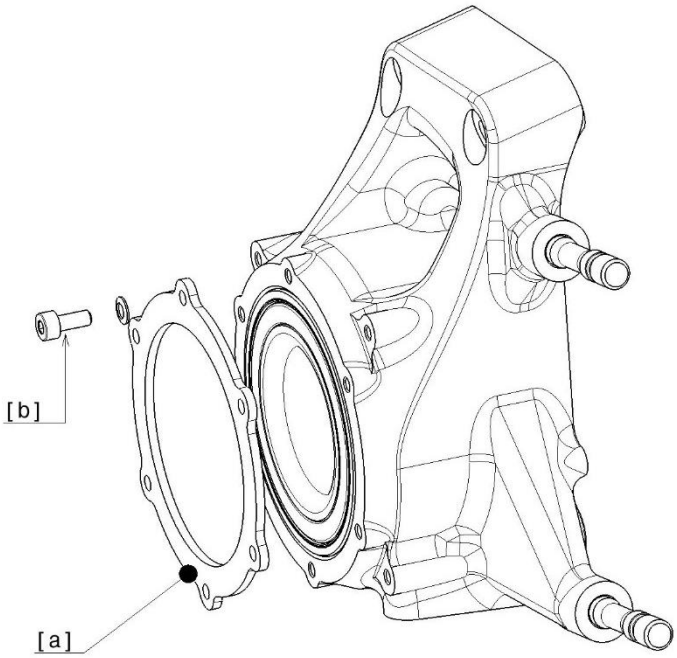

7. Heat the upright and bearing subassembly up to about 120°C.
8. Once heated, use the machined slot [B] to press out the bearing acting on the outer bearing ring.

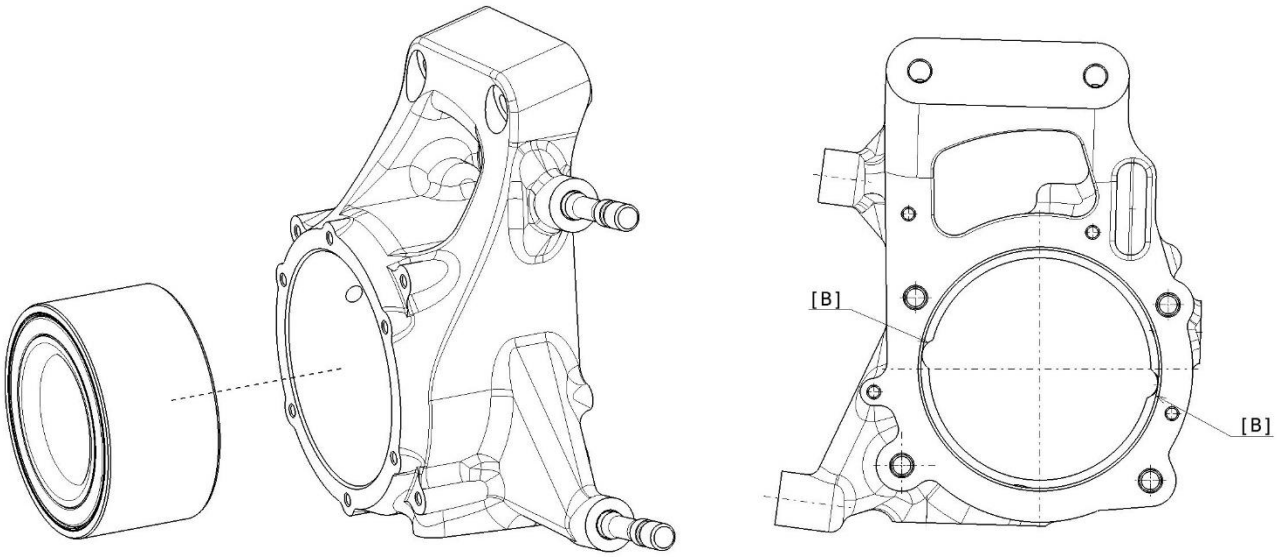

5.7.3 Upright Assembly

Here below the reassembling procedure:

1. Heat the upright to about 120°C and cool the bearing to about -20°C.
2. Put the bearing into the housing acting on the outer race (a press can make the procedure quicker, maximizing the temperature difference effect).
3. Fit the external rim [a], then tight the 6x M5 screws (8 Nm, Loctite 243).

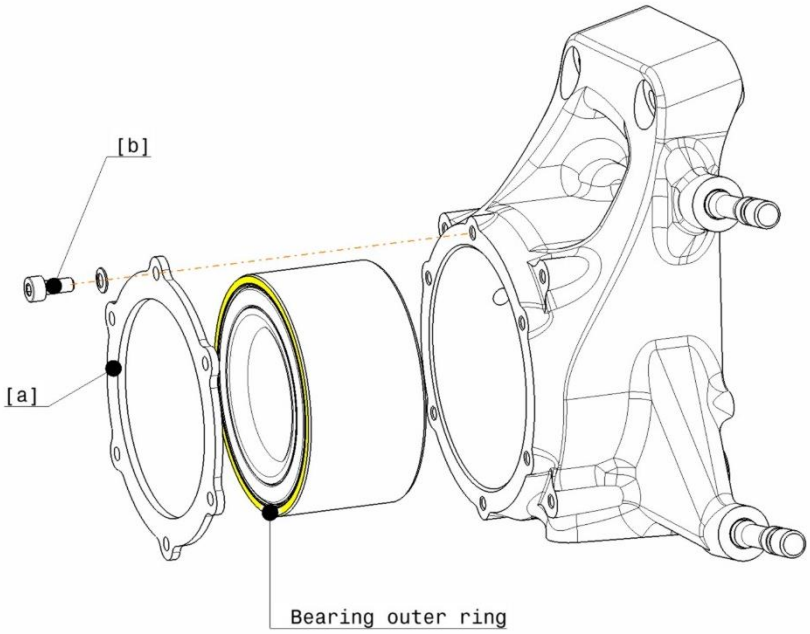

4. Heat the upright and bearing subassembly to about 120°C and cool the hub to about -20°C.
5. Put the hub in the upright. Use a press to make the procedure quicker, maximizing the temperature difference effect. Act on the bearing internal ring, reacting on the hub pegs flange, paying high attention to the correct alignment of the components.

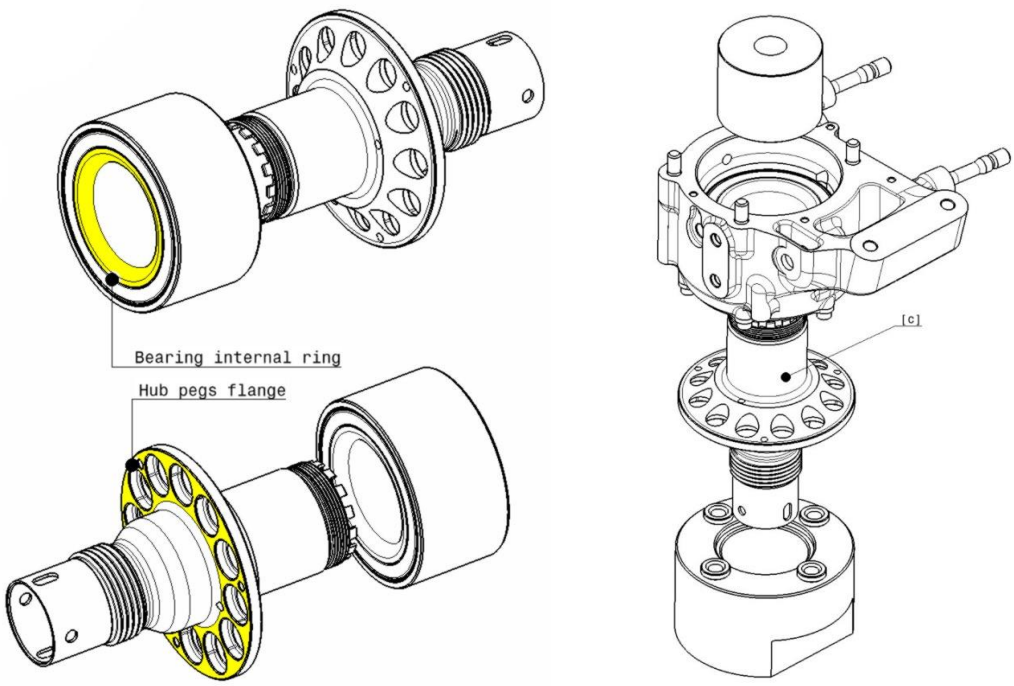

6. Fit the ring nut [d]
7. Using the special tool [e] (pn. 2491011, available on Spare Parts List) tight the ring nut to 500Nm.

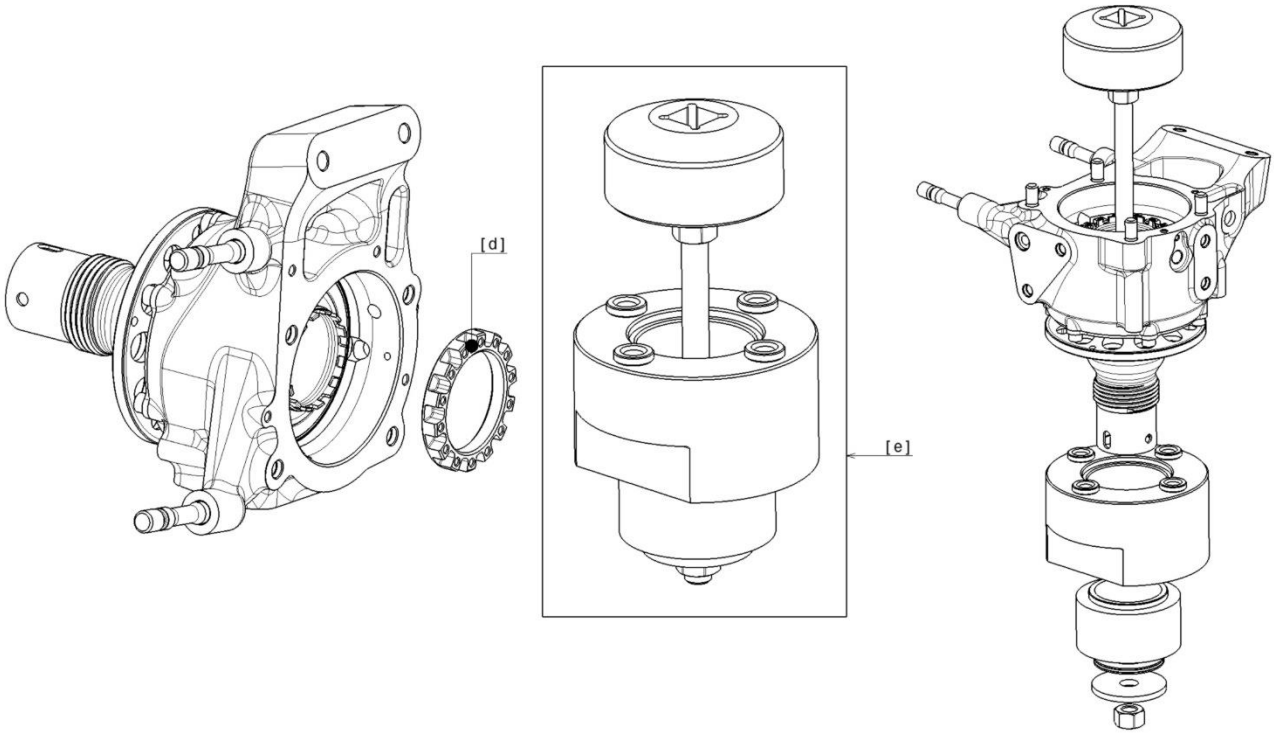

8. Fit the secure ring nut [f] and the M4 screws [g] (4Nm, Loctite 222)

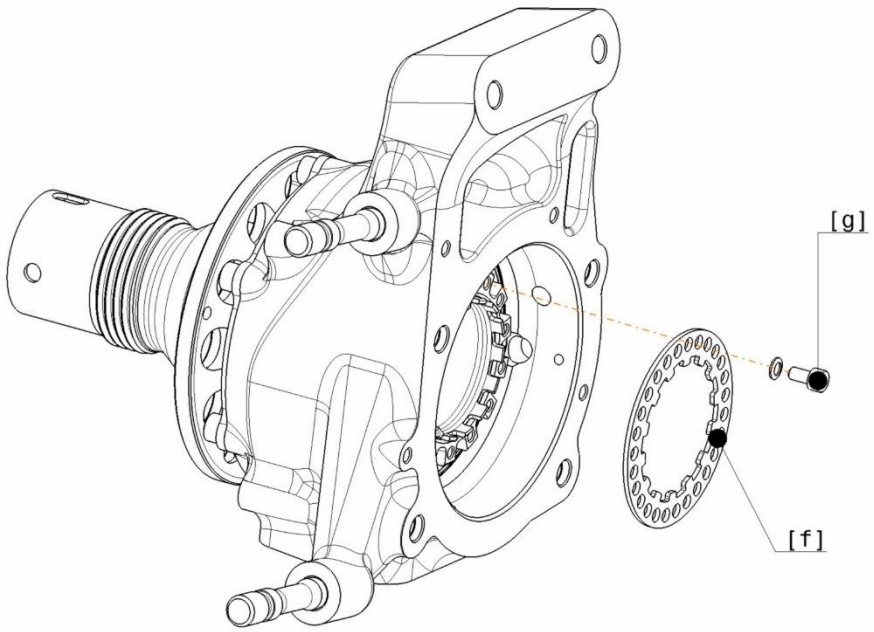

6 STEERING

6.1 STEERING GEOMETRY

6.1.1 Standard ratio: 8 teeth pinion

Steering ratio: 11.9°/°

6.1.2 Option ratio: 7 teeth pinion

Steering ratio: 14.0°/°

6.2 STEERING MAINTENANCE

Installation drawings: please not the orientation of the front joint assembly:

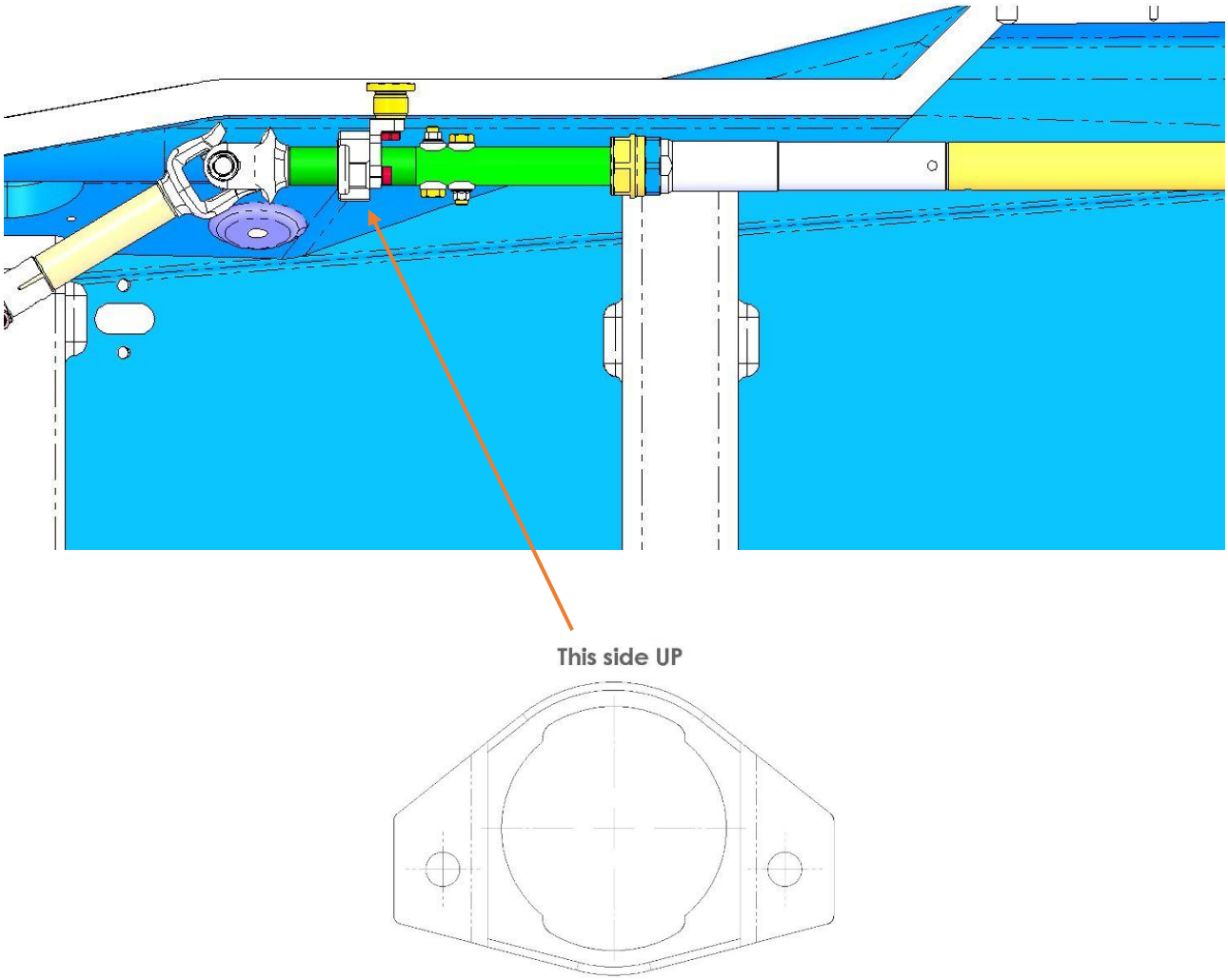

7 WHEELS AND TIRES

7.1 WHEELS

Front wheels: 10.0 inches
Rear wheels: 12.0 inches

Wheel nut tightening torque: 250 Nm

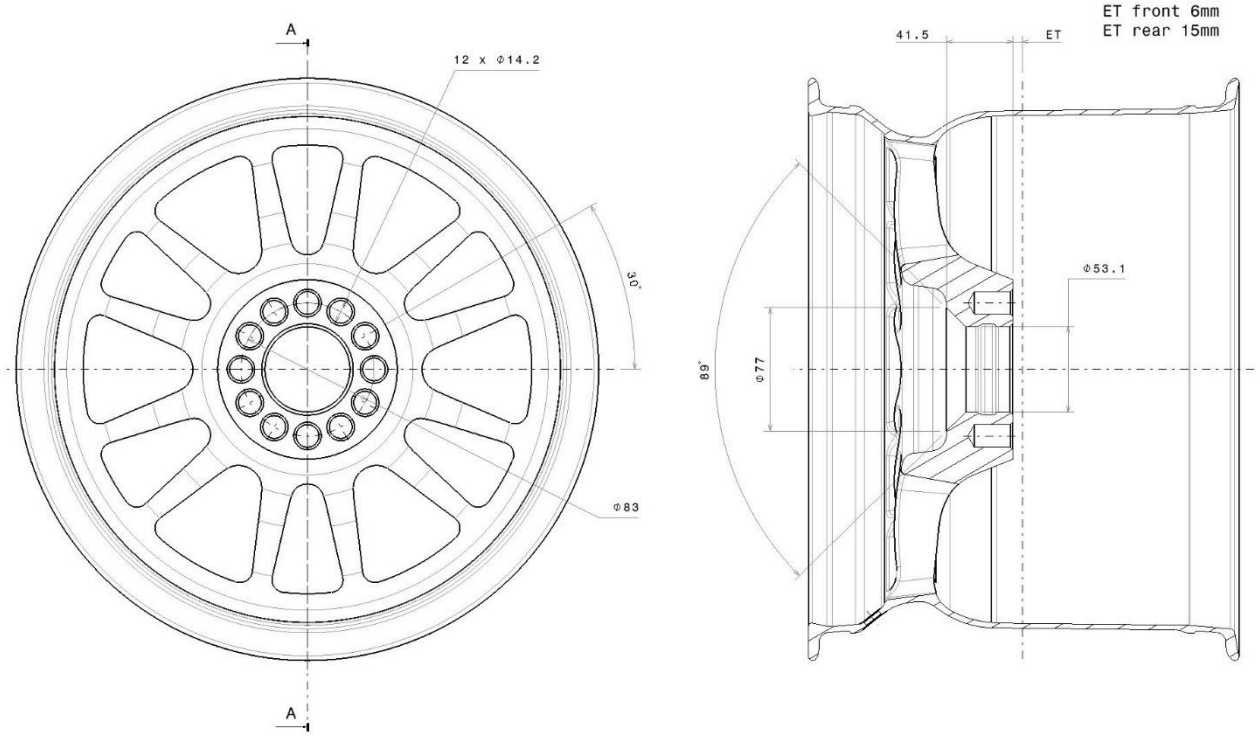

7.2 TIRES

7.2.1 Giti Tires

F3R

Slick Tire

Tire Size		230/550-13	290/570-13
Permitted Rim		9 1/2J; 10 1/2J	11 1/2J; 12 1/2J
Optimum Rim (Measuring)		10J	12J
Section Width (1.1Bar)		279mm	325mm
Overall Diameter (1.1Bar)		559mm	584mm
Overall Circumference (1.1Bar)		1757mm	1834mm
Vertical Spring Rate (Load 200Kg)	16 Psi(1.1Bar)	18.55kgf/mm	21.21kgf/mm
	22 Psi(1.5Bar)	24.38kgf/mm	27.57kgf/mm
Lateral Spring Rate (Load 200Kg)	16 Psi(1.1Bar)	18.25kgf/mm	21.96kgf/mm
	22 Psi(1.5Bar)	23.91kgf/mm	28.84kgf/mm
Longitudinal Spring Rate (Load 200Kg)	16 Psi(1.1Bar)	49.40kgf/mm	57.11kgf/mm
	22 Psi(1.5Bar)	61.60kgf/mm	72.68kgf/mm
Torsional Spring Rate (Load 200Kg)	16 Psi(1.1Bar)	169.47kgf/mm	212.05kgf/mm
	22 Psi(1.5Bar)	156.24kgf/mm	205.61kgf/mm

7.2.2 Pirelli

7.2.2.1 Static measurements

The static measurements within this book are provided for each combination of tyre-rim size. Geometric measurements are taken with the tyre fitted on a rim, inflated to 1.4bar/20.3 Psi

πD [mm]	Circumference length along the middle tread line of the tyre;
C [mm]	Max width maximum width of the tyre;
Cb [mm]	Tread width width of the tread.

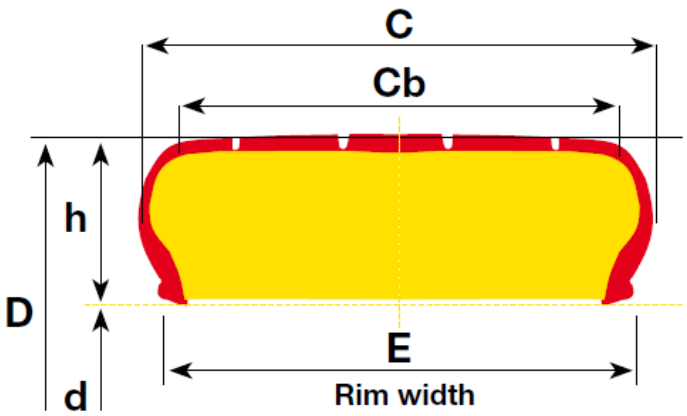

A full characterization of deflection vs. vertical load at different pressures is given; measurements are taken at three different camber levels (0°,-2.0° and -3.0°) for slick tyres.

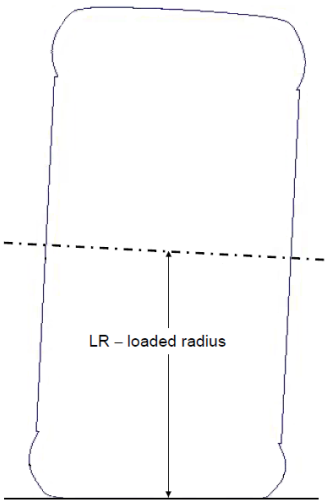

7.2.2.2 Dynamic measurements

Tyre dynamic characterization describes changes in dimensions due to speed and vertical load. All measurements are made without any applied camber (0°) with the tyre inflated to 1.4bar/ 20.3 Psi

Loaded radius LR [mm]	distance between the wheel center and the ground;
Rolling radius RR [mm]	the length travelled by the tyre for each wheel's revolution divided by 2p.

7.2.2.3 Operating instructions

Before each run
Pressures:

- The tyre pressure must always be over the declared minimum running pressure defined within this book.

After each run
Temperatures

- the offset in measured garage bulk temperature between the inside and outside of the tyre should not exceed 20°C for optimum tyre performance
- the offset in measured garage bulk temperatures between front and rear axle should not exceed 25°C for optimum tyre performance

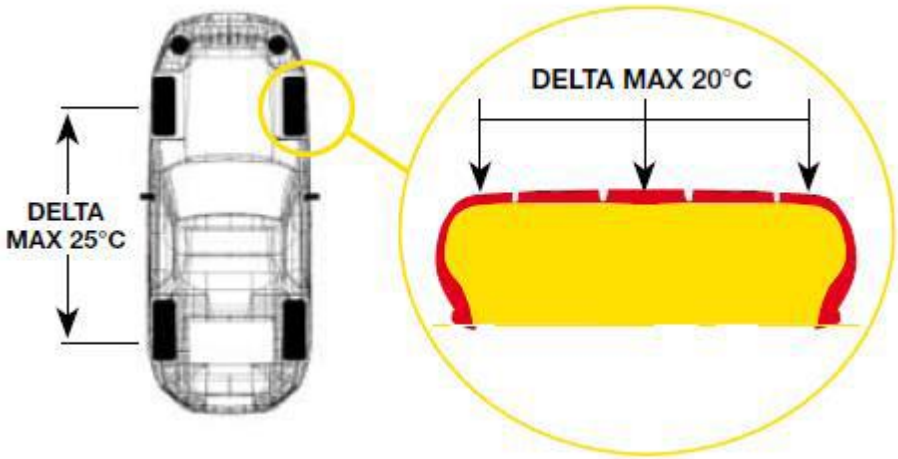

Pressures

- the measured garage pressure should be as close as possible to the hot target value stated within this book
- Dry air is recommended to inflate tyres to avoid sudden changes in pressure due to humidity.
- all pressure limitations (cold and hot) stated in this book will be monitored during each event, and modified if deemed necessary.

7.2.2.4 Technical Limitations – F3 Regional

Tyre Inflation Pressure	
Minimum Inflation Pressure Front	14.5 PSI
Minimum Inflation Pressure Rear	13.5 PSI
Hot Pressure Target (Both Axles)	20.5 PSI

Car Setup Parameters	
Maximum Static Camber Front	Qualifying: -4.75° / Race: -4.25
Maximum Static Camber Rear	Qualifying: -3.0°

NOTE
Please remember that not complying with the technical prescriptions will expose the product to excessive levels of mechanical stress, which could affect the integrity of the product.

To avoid any damage to the tyres caused by air leaks, we recommend the following:

- use metal valves bodies instead of rubber ones;
- check the fixing of the valves and their seal frequently;
- check the valve core;
- use metal valve caps with integral rubber o-ring seal.

7.2.2.5 Static measurements

Slick Tyres				
Size & Fitment	**Nominal Weight (kilograms)**	**Max Width (C) (mm)**	**Circumference (πD) (mm)**	**Tread Width (Cb) (mm)**
250/570-13 13”x10J	6.2	284	1794	230
300/590-13 13”x12J	8.6	385	1860	300

7.2.2.6 Dynamic measurements 230/570-13x10.0J SLICK @ 1.4bar (20.5psi), CA 0.0°

LOADED RADIUS

SPEED [km/h] \ LOAD [N]	350	1050	2275	3500	4375	5250
30	283.8	280.2	274.7	269.3	265.4	261.2
100	284.1	280.4	275.1	269.9	266.0	262.0
180	284.7	281.0	275.7	270.7	267.0	263.1
250	285.6	282.1	276.7	271.8	268.2	264.2

ROLLING RADIUS

SPEED [km/h] \ LOAD [N]	350	1050	2275	3500	4375	5250
30	282.7	281.4	280.6	279.9	279.3	278.6
100	282.9	281.6	280.7	280.1	279.7	279.1
180	283.4	282.1	281.3	280.7	280.3	280.0
250	284.3	283.0	282.1	281.5	281.2	280.9

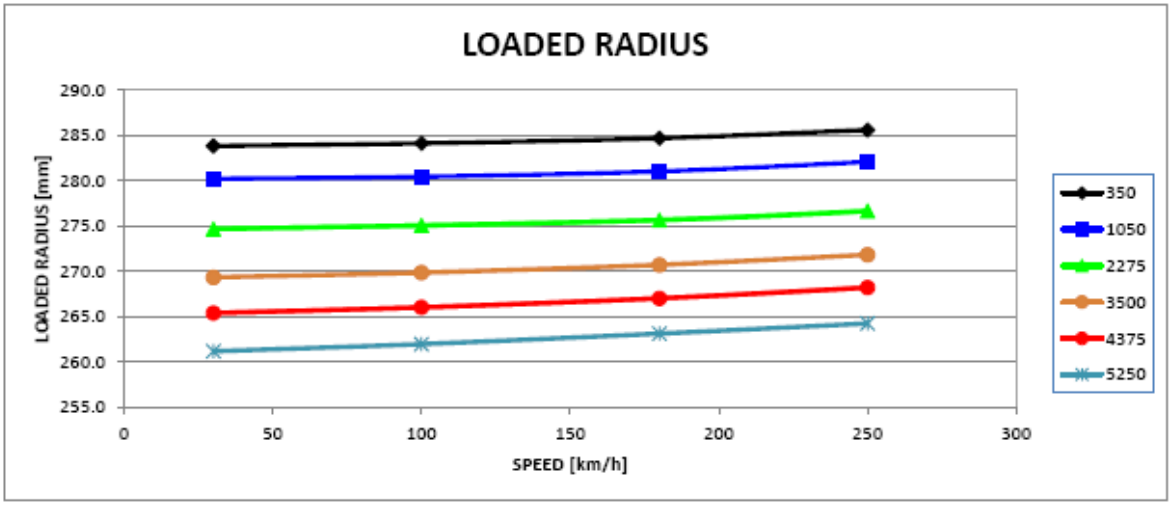

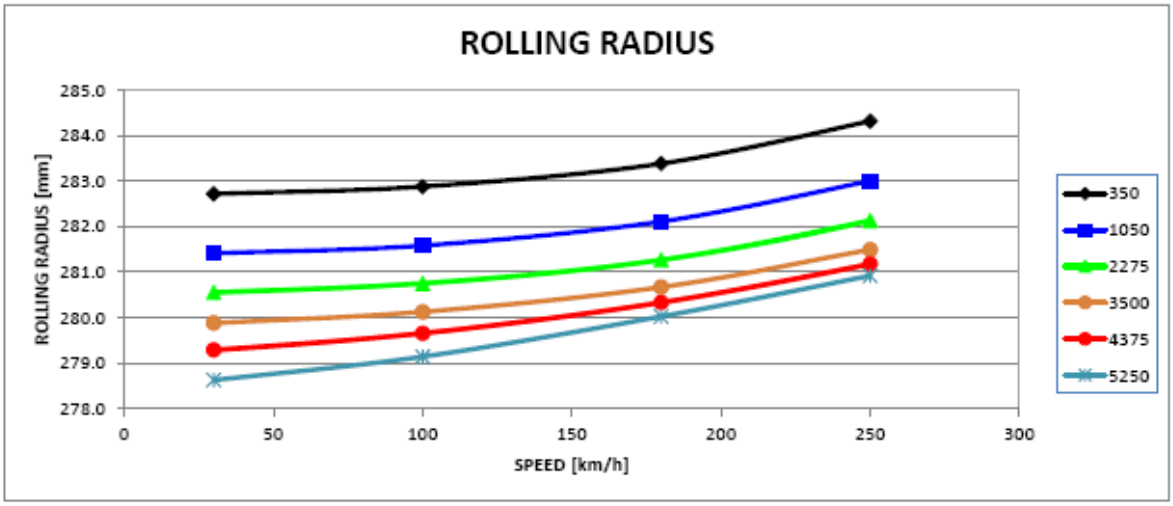

7.2.2.7 Static Radial Deflection 230/570-13x10.0J @ CA 0.0° SLICK

Load [kg]	Inflation Pressure [bar]						
	2.0	1.8	1.6	1.4	1.2	1.0	0.8
0	0.0	0.0	0.0	0.0	0.0	0.0	0.0
25	1.1	1.2	1.3	1.4	1.6	1.8	2.0
50	2.2	2.3	2.5	2.8	3.0	3.4	3.8
75	3.2	3.4	3.7	4.0	4.5	5.0	5.6
100	4.2	4.5	4.8	5.3	5.8	6.4	7.2
125	5.1	5.5	5.9	6.5	7.1	7.9	8.8
150	6.0	6.5	7.0	7.6	8.4	9.2	10.3
175	6.9	7.5	8.0	8.7	9.6	10.5	11.8
200	7.8	8.4	9.0	9.8	10.7	11.8	13.2
225	8.7	9.3	10.0	10.8	11.8	13.0	14.5
250	9.5	10.2	11.0	11.9	12.9	14.2	15.8
275	10.3	11.1	11.9	12.9	14.0	15.4	17.1
300	11.1	11.9	12.8	13.8	15.1	16.5	18.3
325	11.9	12.7	13.7	14.8	16.1	17.6	19.5
350	12.7	13.5	14.5	15.7	17.1	18.7	20.7
375	13.4	14.3	15.4	16.6	18.0	19.7	21.8
400	14.2	15.1	16.2	17.5	19.0	20.8	23.0
425	14.9	15.9	17.0	18.3	19.9	21.8	24.0
450	15.6	16.6	17.8	19.2	20.8	22.7	25.1
475	16.3	17.4	18.6	20.0	21.7	23.7	26.2
500							
525							
550							
575							
600							
625							
650							
675							
700							
725							
750							
775							
800							

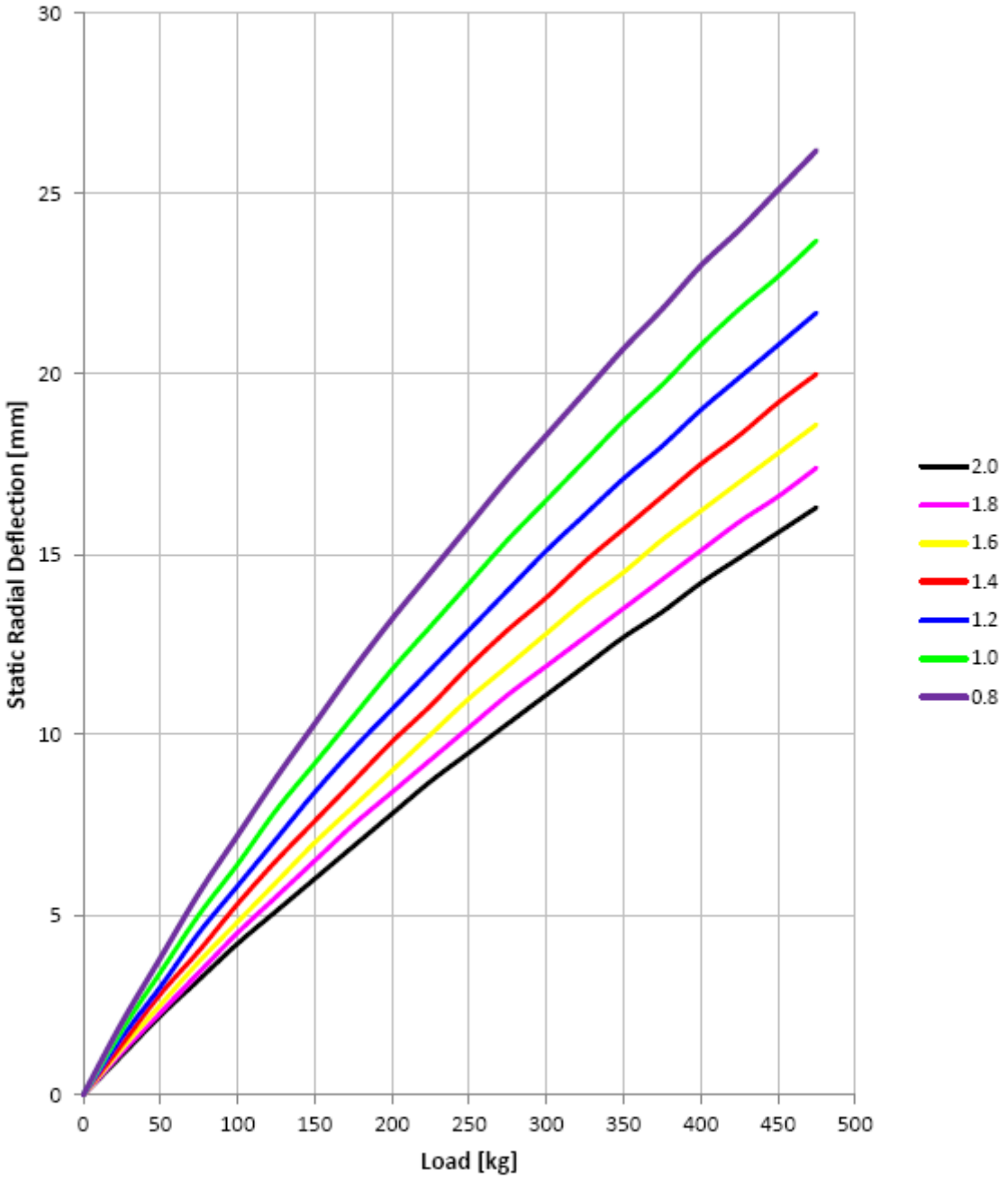
30
25
20
15
10
5
0
Static Radial Deflection [mm]
0
50
100
150
200
250
300
350
400
450
500
Load [kg]
2.0
1.8
1.6
1.4
1.2
1.0
0.8

7.2.2.8 Static Radial Deflection 230/570-13x10.0J @ CA 3.0° SLICK

Load [kg]	Inflation Pressure [bar]						
	2.0	1.8	1.6	1.4	1.2	1.0	0.8
0	0.0	0.0	0.0	0.0	0.0	0.0	0.0
25	1.2	1.3	1.4	1.6	1.7	1.9	2.2
50	2.3	2.5	2.7	3.0	3.3	3.7	4.2
75	3.4	3.7	4.0	4.4	4.8	5.4	6.1
100	4.5	4.8	5.2	5.7	6.3	7.0	7.8
125	5.5	5.9	6.4	7.0	7.6	8.5	9.5
150	6.5	7.0	7.5	8.2	9.0	9.9	11.1
175	7.5	8.0	8.6	9.4	10.2	11.3	12.6
200	8.4	9.0	9.7	10.5	11.4	12.6	14.1
225	9.3	9.9	10.7	11.6	12.6	13.9	15.5
250	10.2	10.9	11.7	12.6	13.8	15.1	16.8
275	11.0	11.8	12.6	13.7	14.9	16.3	18.1
300	11.8	12.7	13.6	14.7	16.0	17.5	19.4
325	12.6	13.5	14.5	15.7	17.0	18.6	20.6
350	13.4	14.4	15.4	16.6	18.0	19.7	21.8
375	14.2	15.2	16.3	17.5	19.0	20.8	23.0
400	15.0	16.0	17.1	18.4	20.0	21.9	24.2
425	15.8	16.8	18.0	19.3	21.0	22.9	25.3
450	16.5	17.6	18.8	20.2	21.9	23.9	26.4
475	17.2	18.3	19.6	21.1	22.8	24.9	27.4
500							
525							
550							
575							
600							
625							
650							
675							
700							
725							
750							
775							
800							

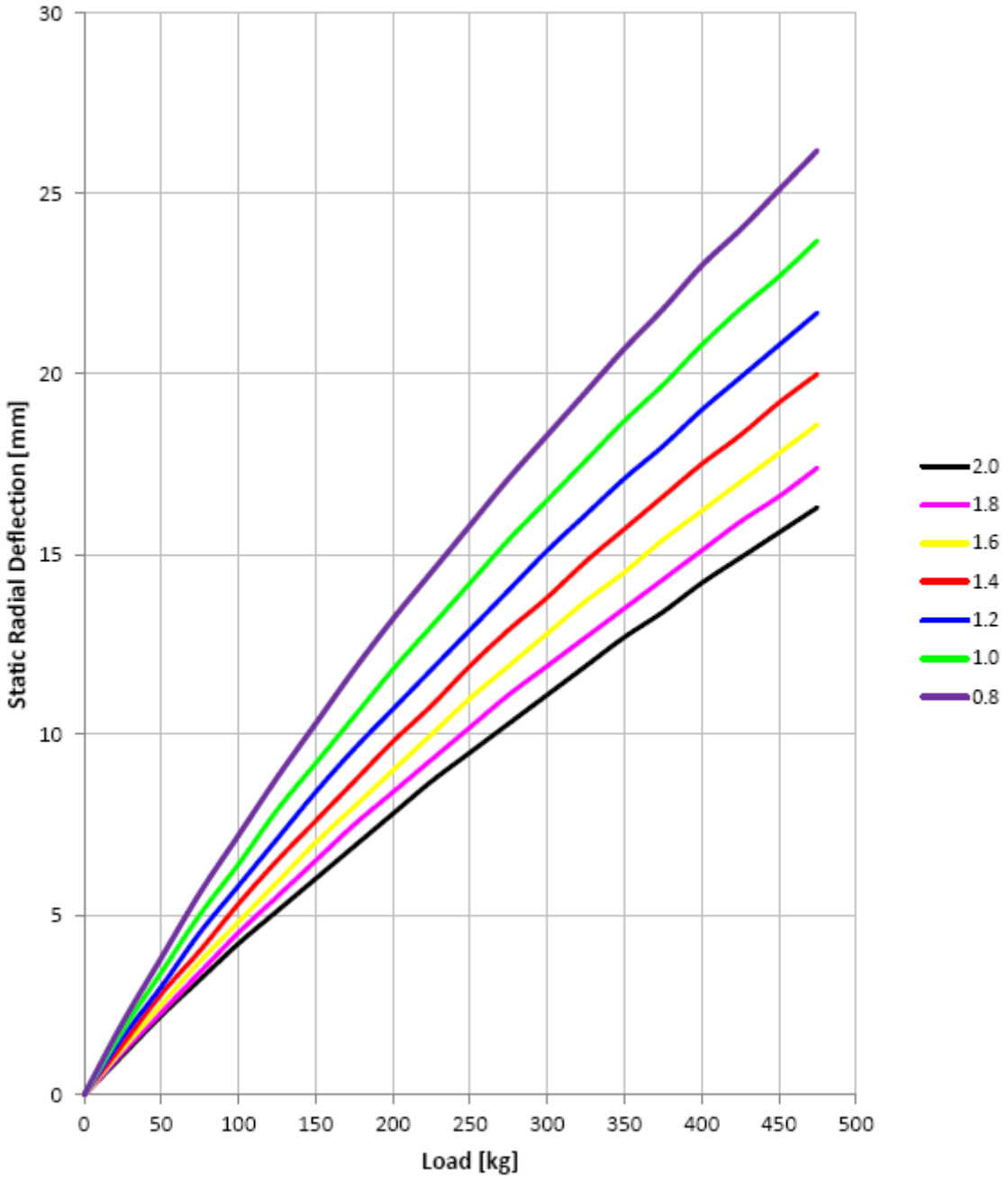
Static Radial Deflection [mm]
Load [kg]
0
5
10
15
20
25
30
0
50
100
150
200
250
300
350
400
450
500
2.0
1.8
1.6
1.4
1.2
1.0
0.8

7.2.2.9 Dynamic measurements 300/590-13x12.0J SLICK @ 1.4bar (20.5psi), CA 0.0°

LOADED RADIUS

SPEED [km/h] \ LOAD [N]	200	600	1300	2000	2500	3000
15	294.7	292.8	289.9	287.3	285.4	283.4
60	294.7	293.0		287.5		283.7
100	294.9	293.1	290.3	287.7	285.8	283.9
140	295.0	293.3		288.0		284.3
180	295.3	293.6	290.7	288.2	286.3	284.4
220	295.6	293.9		288.5		284.9
250	295.9	294.1	291.3	288.8	287.0	285.1

ROLLING RADIUS

SPEED [km/h] \ LOAD [N]	200	600	1300	2000	2500	3000
15	294.8	291.9	290.6	289.9	289.6	289.3
60	294.7	292.0		289.8		289.3
100	295.0	292.1	290.7	289.9	289.6	289.3
140	295.2	292.3		290.1		289.5
180	295.4	292.6	291.1	290.3	290.0	289.7
220	295.7	292.8		290.6		290.0
250	296.0	293.1	291.7	290.9	290.6	290.3

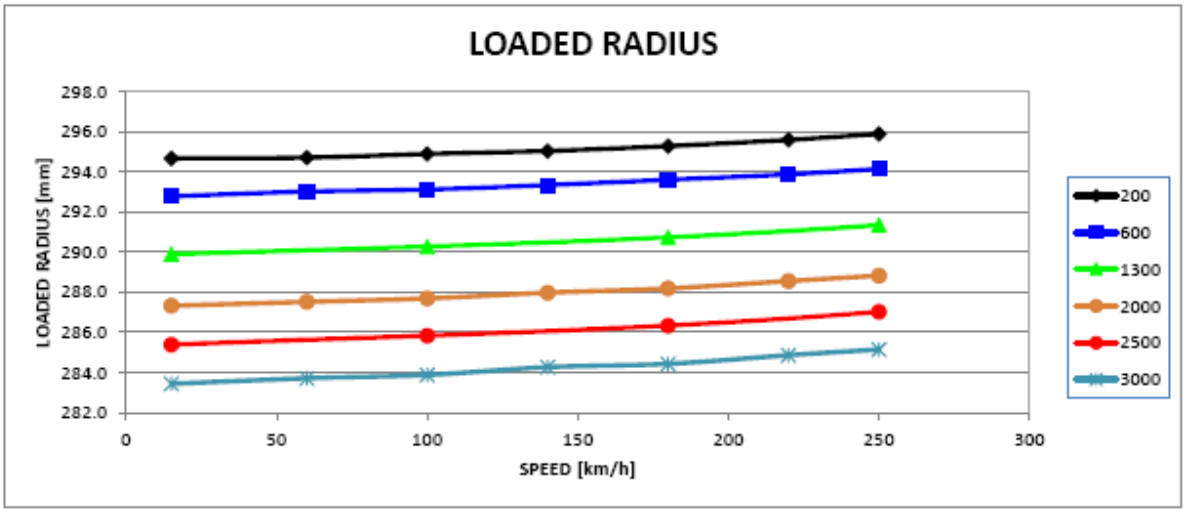

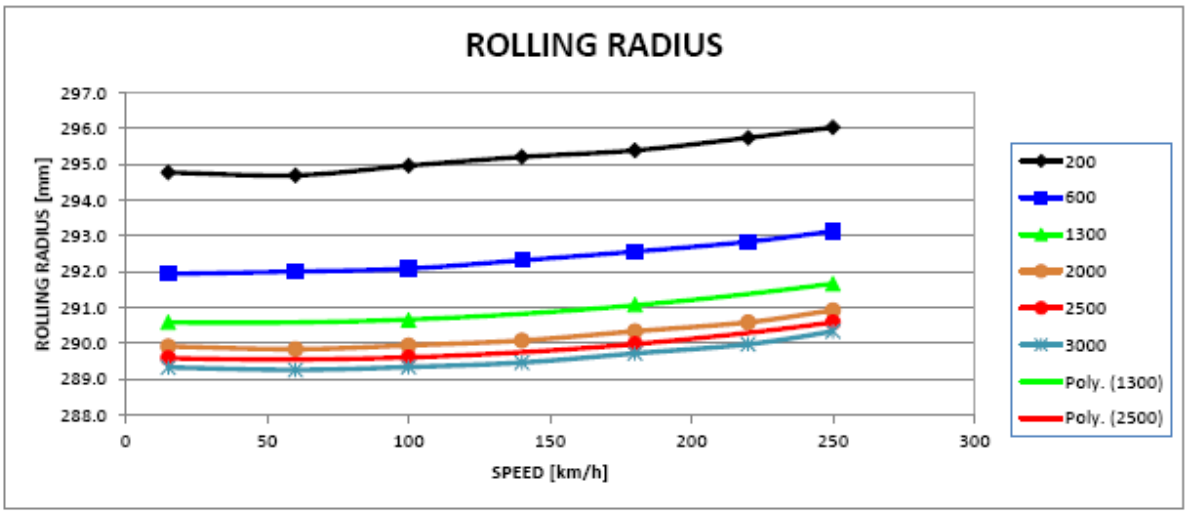

7.2.2.10 Static Radial Deflection 300/590-13x12.0J @ CA 0.0° SLICK

Load [kg]	Inflation Pressure [bar]						
	2.0	1.8	1.6	1.4	1.2	1.0	0.8
0		0.0	0.0	0.0	0.0	0.0	
25		1.3	1.3	1.4	1.5	1.5	
50		2.5	2.5	2.6	2.8	2.9	
75		3.5	3.6	3.8	4.1	4.3	
100		4.4	4.6	4.9	5.3	5.6	
125		5.3	5.5	5.9	6.4	6.9	
150		6.1	6.4	6.8	7.5	8.1	
175		6.8	7.2	7.7	8.5	9.3	
200		7.6	7.9	8.6	9.5	10.5	
225		8.3	8.7	9.4	10.5	11.6	
250		8.9	9.4	10.2	11.4	12.7	
275		9.6	10.1	11.0	12.3	13.8	
300		10.2	10.7	11.7	13.1	14.8	
325		10.8	11.4	12.5	14.0	15.9	
350		11.3	12.0	13.2	14.8	16.9	
375		11.9	12.6	13.9	15.6	17.9	
400		12.4	13.2	14.5	16.4	18.9	
425		12.9	13.8	15.2	17.1	19.8	
450		13.5	14.3	15.8	17.9	20.7	
475		14.0	14.8	16.4	18.6	21.7	
500		14.5	15.4	17.0	19.3	22.6	
525							
550							
575							
600							
625							
650							
675							
700							
725							
750							
775							
800							

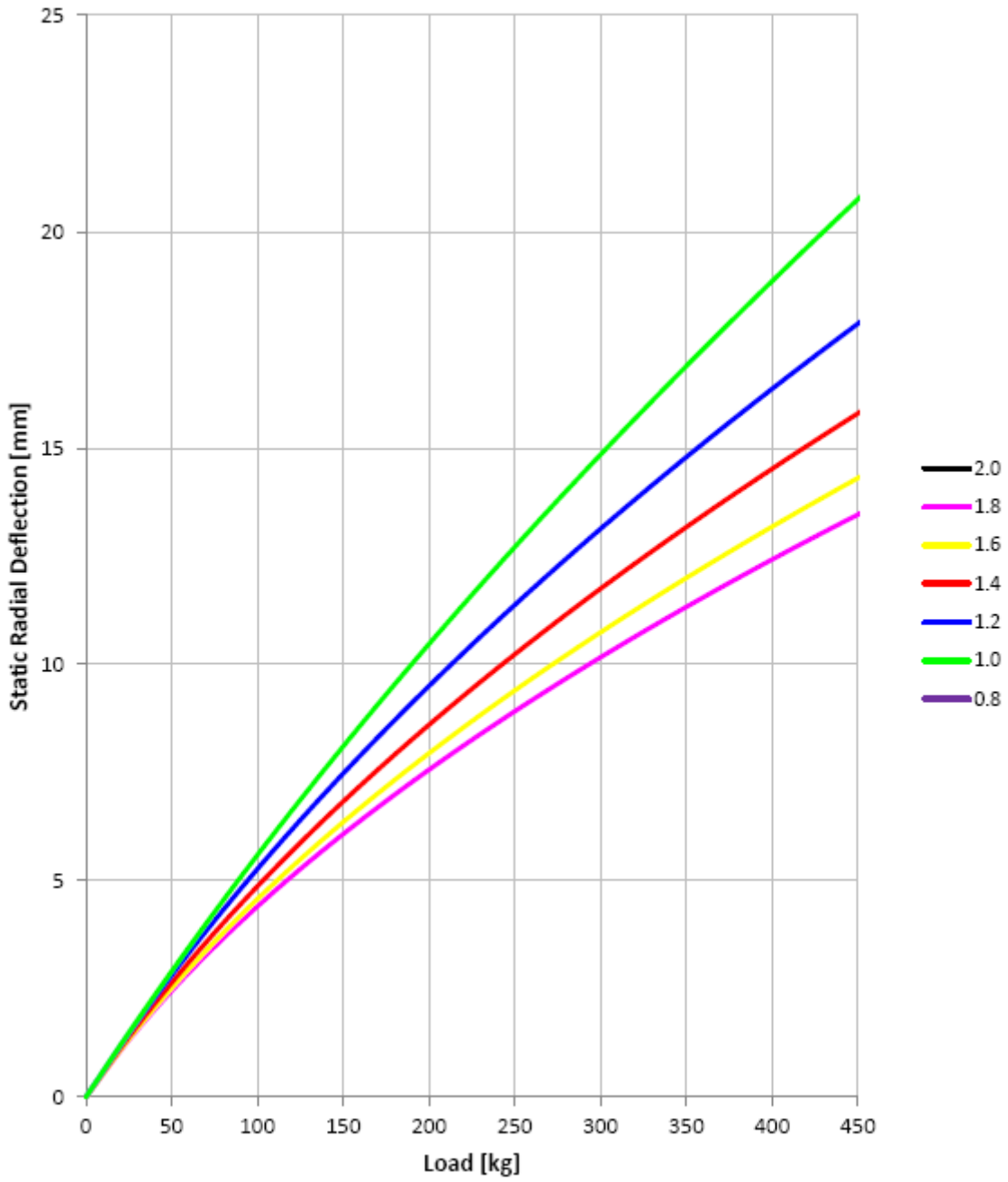
Static Radial Deflection [mm]
25
20
15
10
5
0
0
50
100
150
200
250
300
350
400
450
Load [kg]
2.0
1.8
1.6
1.4
1.2
1.0
0.8

7.2.2.11 Static Radial Deflection 300/590-13x12.0J @ CA 3.0° SLICK

Load [kg]	Inflation Pressure [bar]						
	2.0	1.8	1.6	1.4	1.2	1.0	0.8
0		0.0	0.0	0.0	0.0	0.0	
25		1.4	1.5	1.6	1.7	1.9	
50		2.8	2.9	3.1	3.3	3.7	
75		4.0	4.1	4.4	4.8	5.4	
100		5.1	5.3	5.7	6.2	7.0	
125		6.2	6.5	6.9	7.6	8.5	
150		7.2	7.5	8.1	8.9	10.0	
175		8.1	8.6	9.2	10.1	11.4	
200		9.0	9.6	10.3	11.3	12.8	
225		9.9	10.5	11.3	12.5	14.1	
250		10.8	11.4	12.3	13.6	15.4	
275		11.6	12.3	13.3	14.7	16.6	
300		12.4	13.2	14.2	15.8	17.8	
325		13.1	14.0	15.1	16.8	19.0	
350		13.9	14.8	16.0	17.9	20.1	
375		14.6	15.6	16.9	18.8	21.2	
400		15.3	16.4	17.7	19.8	22.3	
425		16.0	17.1	18.5	20.8	23.4	
450		16.7	17.8	19.3	21.7	24.5	
475		17.3	18.6	20.1	22.6	25.5	
500		18.0	19.3	20.9	23.5	26.5	
525							
550							
575							
600							
625							
650							
675							
700							
725							
750							
775							
800							

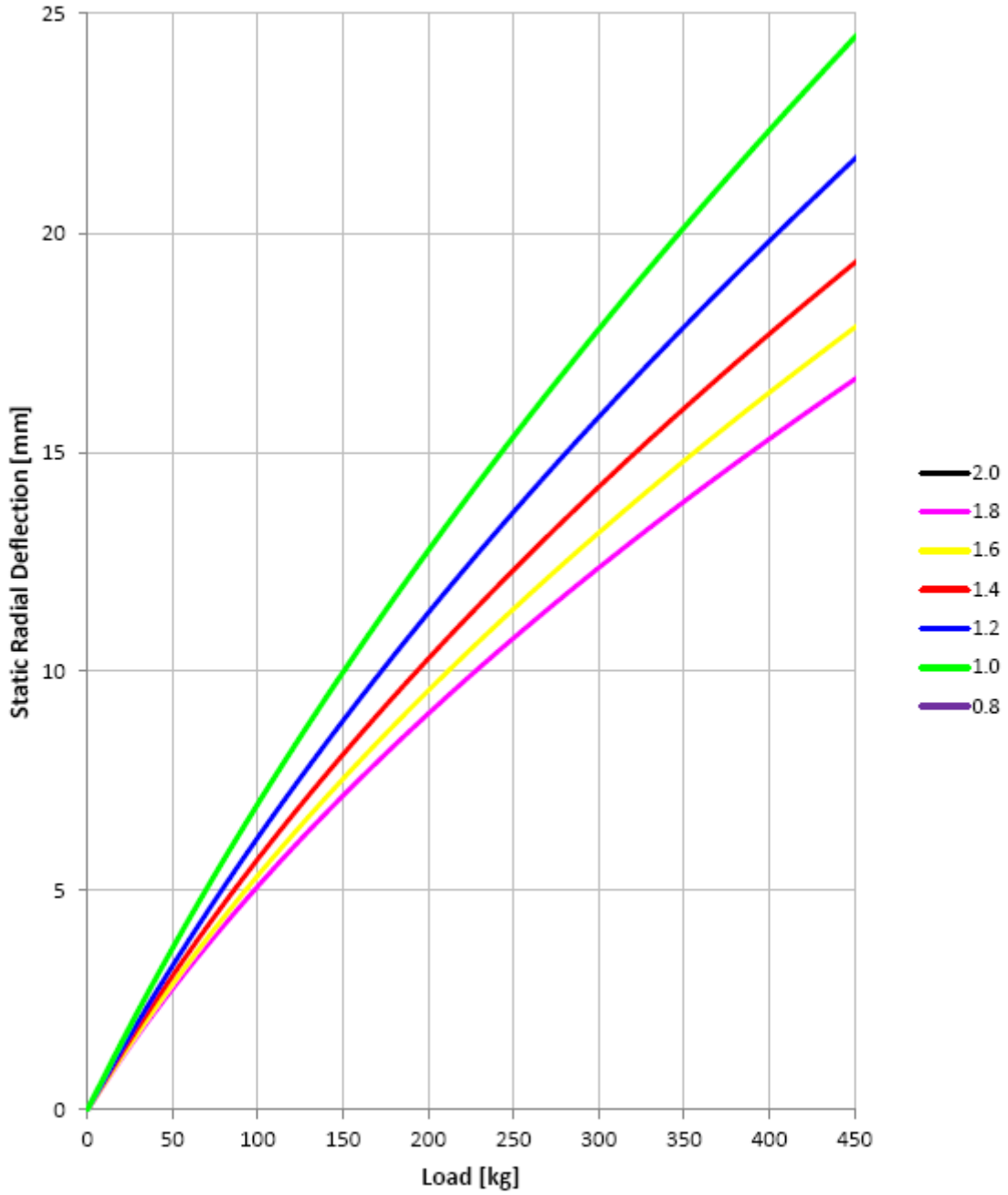
25
20
15
10
5
0
Static Radial Deflection [mm]
0
50
100
150
200
250
300
350
400
450
Load [kg]
2.0
1.8
1.6
1.4
1.2
1.0
0.8

7.2.3 Hankook

HANKOOK

F200 - SLICK TIRE

Tire Size		230/560R13 F200	280/580R13 F200
Permitted Rim		9.5"~10.5"	11.5"~12.5"
Optimum Rim (Measuring)		8.5"	10.5"
Tread Width (mm)		230	280
Section Width (mm)		282	335
Overall Diameter (mm)		551	572
Overall Circumference (mm)		1731	1797
Revolutions/km		599.3	577.3
Recommended Inflation Pressure (bar)	Cold	1.1~1.2	1.1~1.2
	Hot	1.5~1.6	1.5~1.6
Recommended Camber		-2.5~3.5	-2.0~2.5
Recommended Toe		20' OUT	10' IN

Circuit **Wet**

ventus Z217

Extremely reliable circuit tire for exclusive use on wet surfaces.

Circuit **Slick**

ventus F200

Top-notch performance slick tire with consistency on dry surface.

Compound Marking

C30

- **Compound** (**3** : Hard / **5** : Medium / **7** : Soft / **9** : Super Soft)
- **Version**
- **Tire Category** (**C** : Circuit / **G** : Gravel Rally / **T** : Tarmac rally / **W** : Wet(or intermediate))

TREAD ◄	HARD	Stiffness	SOFT	►
CIRCUIT / TARMAC (F200, Z205, Z209, Z214)	C(T)3	C(T)5	C(T)7	C(T)9
GRAVEL (R201, 202)	G3	G5	G7	
WET / INTERMEDIATE (Z206, 207, 210, 213, 217)		W5		

7.2.3.1 Tyre Characteristics (Static measurement)

7.2.3.1.1 Dimension

- The rim width shall be selected/used within the range recommended for each tire size.
- The outer diameter of the tyre shall be measured with no load applied under the appropriate pressure conditions, based on the recommended rim size.

300 / 680 R 18	
300	Design Tread Arc Width, **B (mm)**
680	Design Overall Diameter, **A (mm)**
R	Radial
18	Rim Diameter (inch)

Size		Compound		Rim Width		Overall Diameter	Section Width	Tread Width	Tread Depth
				Recommend	Optimum				
				[inch]	[inch]	[mm]	[mm]	[mm]	[mm]
Slick	230/560R13 F200	F200	C72	9.5~10.5J	10.0J	551	282	230	3.5
Slick	280/580R13 F200	F200	C72	11.5~12.5J	12.0J	572	335	280	3.5

Size		Compound		Rim Width		Overall Diameter	Section Width	Tread Width	Tread Depth
				Recommend	Optimum				
				[inch]	[inch]	[mm]	[mm]	[mm]	[mm]
Rain	230/560R13 Z217	Z217	W52	9.5~10.5J	10.0J	556	282	230	6.0
Rain	280/580R13 Z217	Z217	W52	11.5~12.5J	12.0J	576	335	280	6.0

7.2.3.1.2 Static Radial Deflection (Kv)

Static Radial Deflection_<230/560R13 F200(10.0J)>_CA 0.0° Slick

Load[kg]	Inflation Pressure[Bar]		
	1.2	1.5	1.8
0		0	
50		2.9	
100		5.4	
150		7.8	
200		10.2	
300		15.4	
400		20.4	
450		22.9	

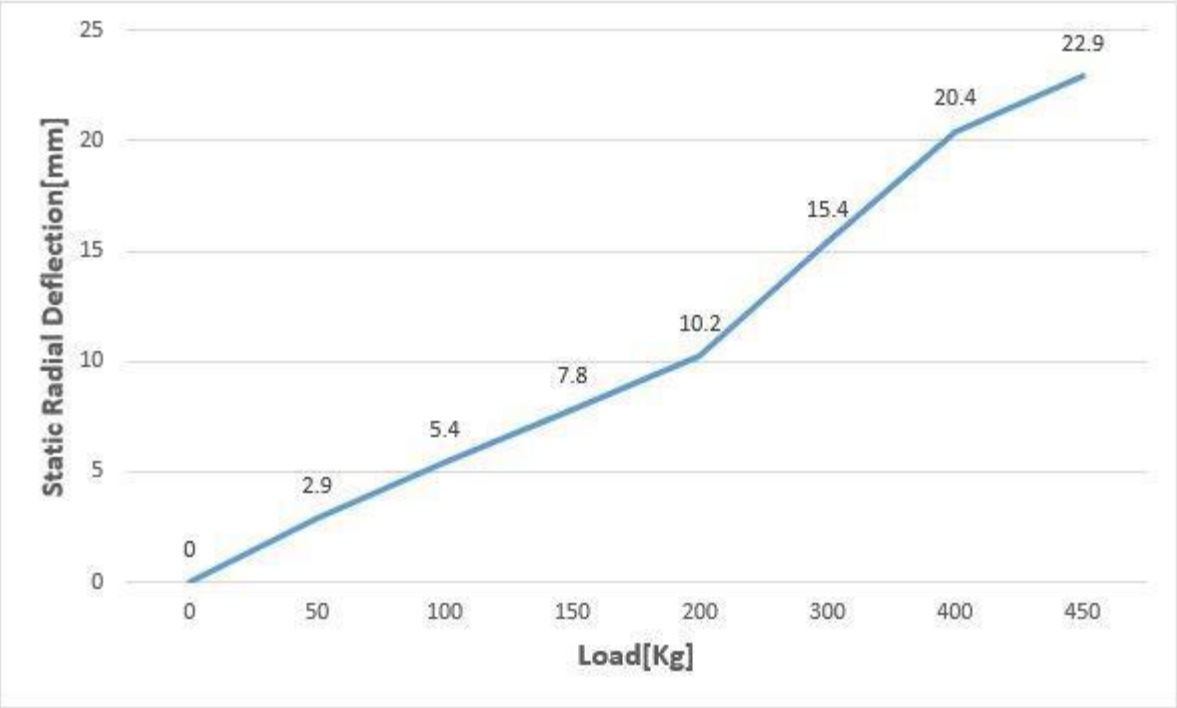

Static Radial Deflection_<280/580R13 F200(12.0J)>_CA 0.0° Slick

Load[kg]	Inflation Pressure[Bar]		
	1.2	1.5	1.8
0		0	
50		2.6	
100		4.9	
150		7.1	
200		9.3	
300		13.8	
400		18.4	
450		20.7	

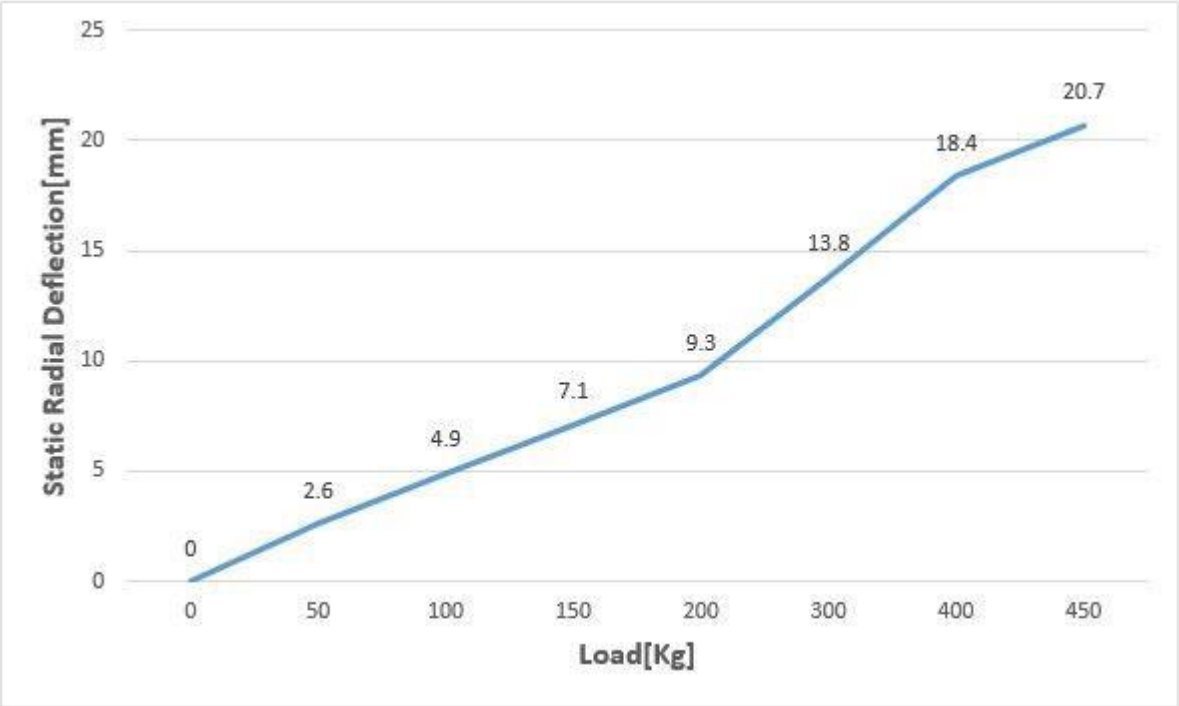

Static Radial Deflection_<230/560R13 Z217(10.0J)>_CA 0.0° Rain

Load[kg]	Inflation Pressure[Bar]		
	1.2	1.5	1.8
0		0	
50		3	
100		5.7	
150		8.2	
200		10.6	
300		15.7	
400		20.6	
450		23.1	

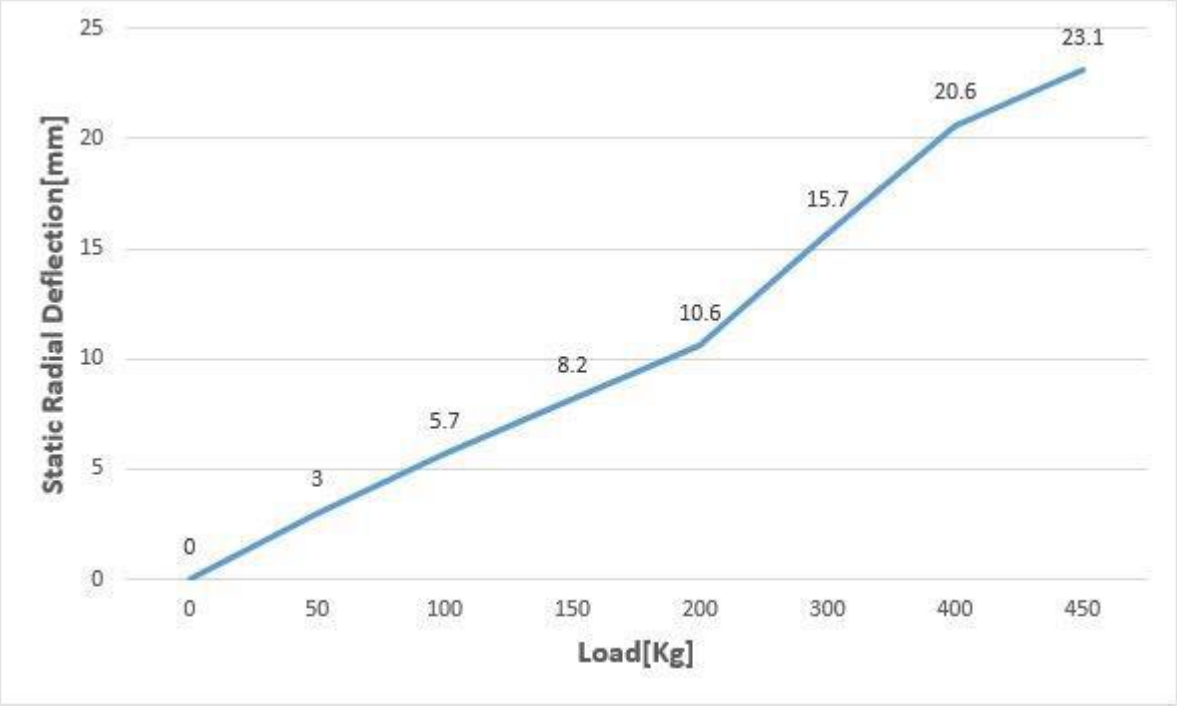

Static Radial Deflection_<280/580R13 Z217(12.0J)>_CA 0.0° Rain

Load[kg]	Inflation Pressure[Bar]		
	1.2	1.5	1.8
0		0	
50		2.8	
100		5.1	
150		7.2	
200		9.3	
300		13.8	
400		18.4	
450		20.7	

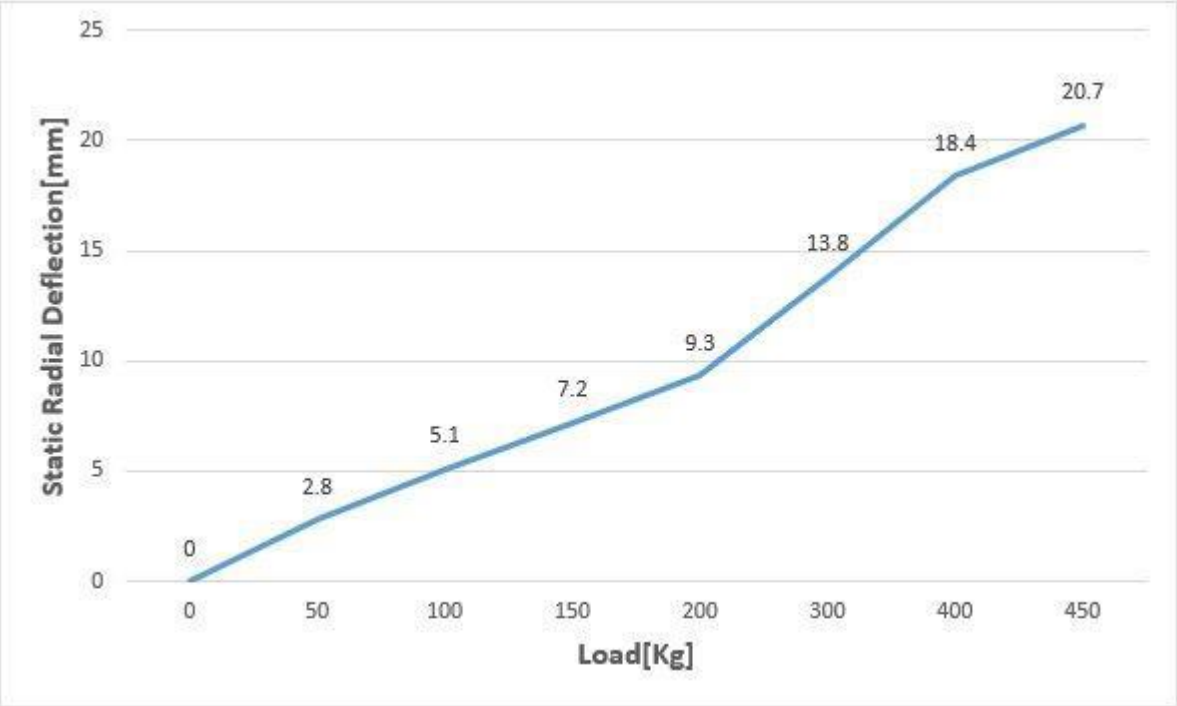

7.2.3.2 Tyre Characteristics (Dynamic Measurement)

Tire dynamic characteristics are dimensional changes due to speed and vertical load.
Loaded Radius (DLR) : Distance between wheel center and ground (Unit: mm)

7.2.3.2.1 Dynamic measurements 230/560R13 F200(10J) Slick @ 1.5Bar, CA 0.0°

Loaded Radius

Speed[Km/h] \ Load[N]	204	306	408
50	270.4	266.0	262.7
100	270.9	266.7	262.7
150	271.9	268.1	263.7
200	273.7	269.9	265.6
210	274.1	270.4	266.3
220	274.5	270.8	266.8
230	274.7	271.3	267.3
240	275.7	271.9	267.7
250	276.3	272.3	268.2
260	276.7	272.5	268.7
270	277.0	272.8	269.1
280	277.3	273.3	269.7
290	277.6	273.7	270.3
300	278.0	274.2	270.9

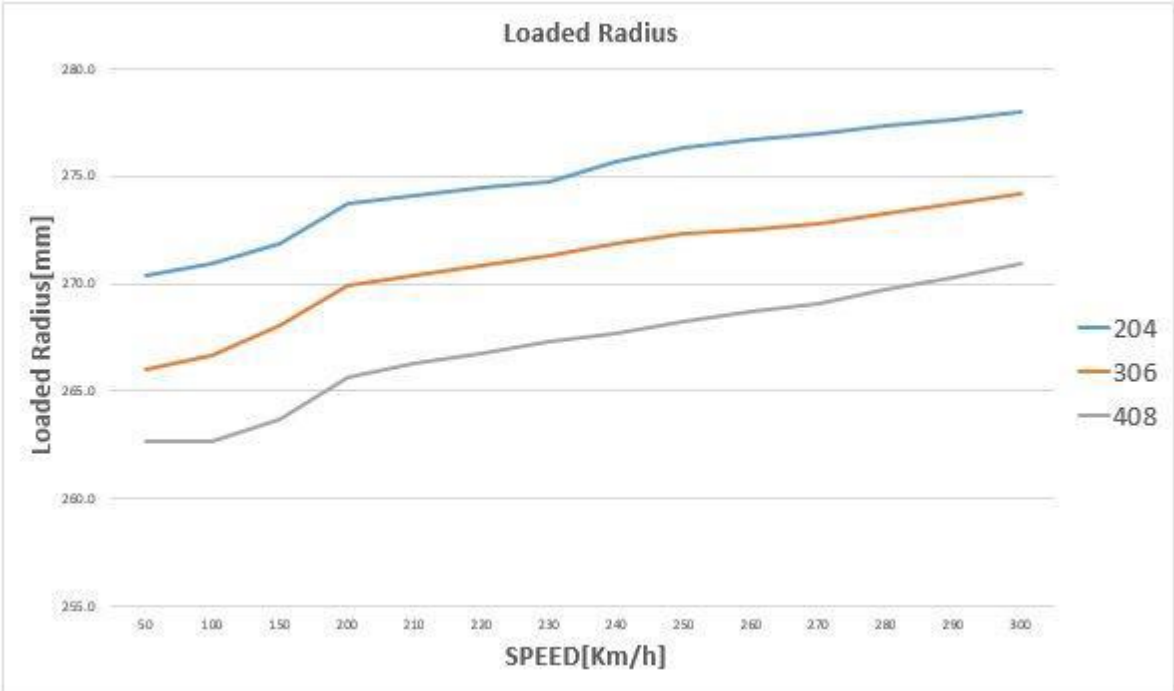

7.2.3.2.2 Dynamic measurements 280/580R13 F200(12J) Slick @ 1.5Bar, CA 0.0°

Loaded Radius

Speed[Km/h]	Load[N] 306	408	510
50	278.7	275.5	272.0
100	278.7	275.5	272.0
150	279.0	276.0	272.4
200	280.9	277.7	274.2
210	281.4	278.2	274.8
220	282.0	278.7	275.3
230	282.4	279.1	275.7
240	283.0	279.6	276.1
250	283.4	280.0	276.5
260	283.9	280.5	276.9
270	284.4	281.0	277.3
280	284.9	281.4	277.8
290	285.3	281.9	278.5
300	285.7	282.3	279.1

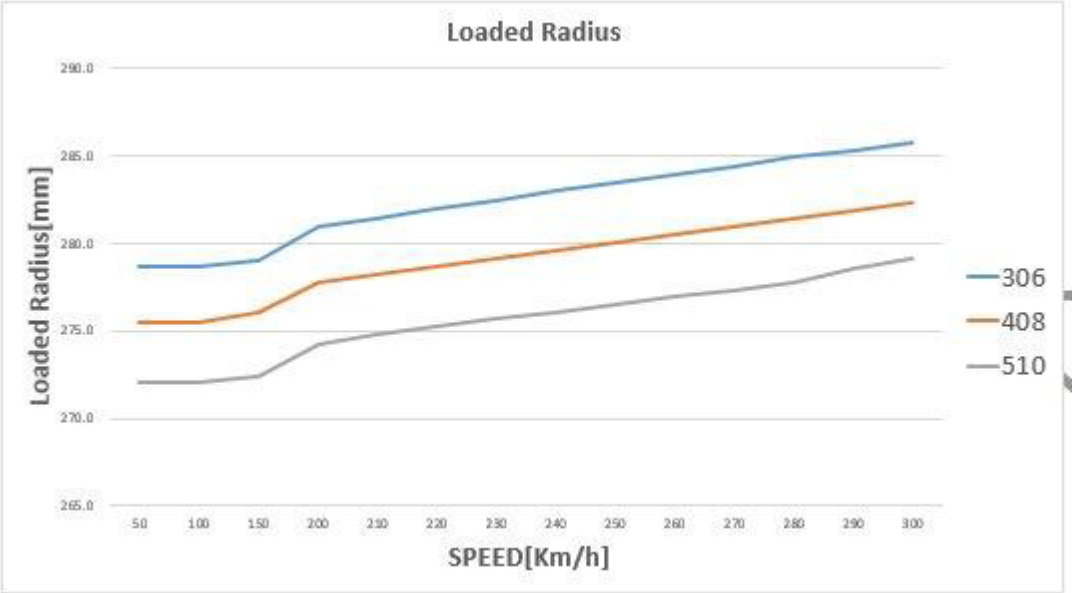

7.2.3.2.3 Dynamic measurements 230/560R13 Z217(10J) Rain @ 1.5Bar, CA 0.0°

Loaded Radius

Speed[Km/h] \ Load[N]	204	306	408
50	272.3	269.5	265.4
100	272.7	269.5	265.4
150	274.1	270.6	266.4
200	276.3	272.8	268.8
210	277.1	273.3	269.5
220	277.4	273.8	270.1
230	277.8	274.3	270.7
240	278.5	274.9	271.1
250	279.5	275.6	271.7
260	280.1	276.0	272.2
270	280.6	276.4	272.4
280	281.0	277.0	272.9
290	281.5	277.5	273.2
300	282.0	278.2	273.2

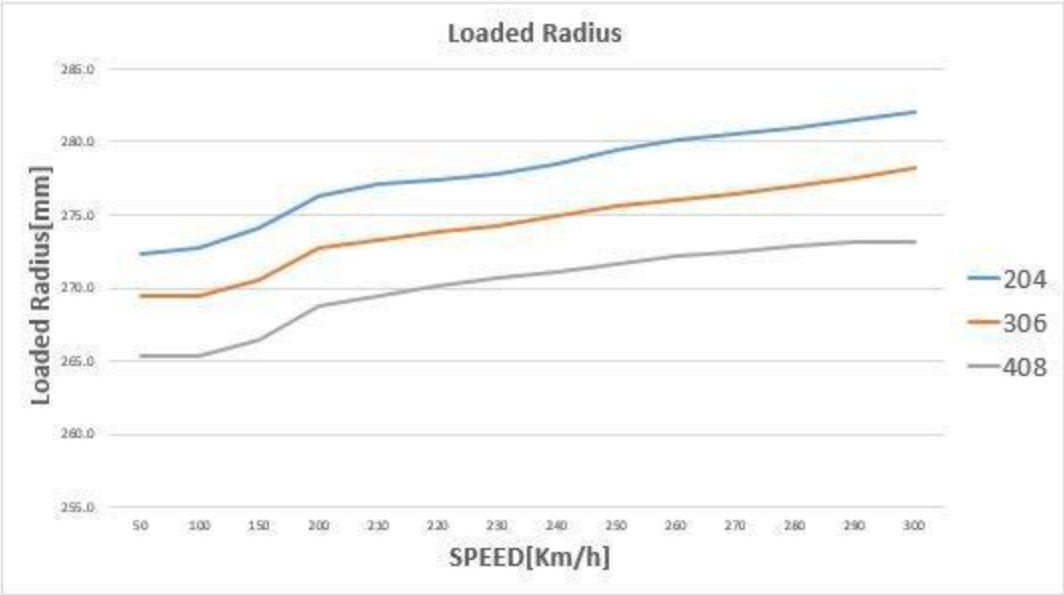

7.2.3.2.4 Dynamic measurements 230/560R13 Z217(10J) Rain @ 1.5Bar, CA 0.0°

Loaded Radius

Speed[Km/h] \ Load[N]	204	306	408
50	272.3	269.5	265.4
100	272.7	269.5	265.4
150	274.1	270.6	266.4
200	276.3	272.8	268.8
210	277.1	273.3	269.5
220	277.4	273.8	270.1
230	277.8	274.3	270.7
240	278.5	274.9	271.1
250	279.5	275.6	271.7
260	280.1	276.0	272.2
270	280.6	276.4	272.4
280	281.0	277.0	272.9
290	281.5	277.5	273.2
300	282.0	278.2	273.2

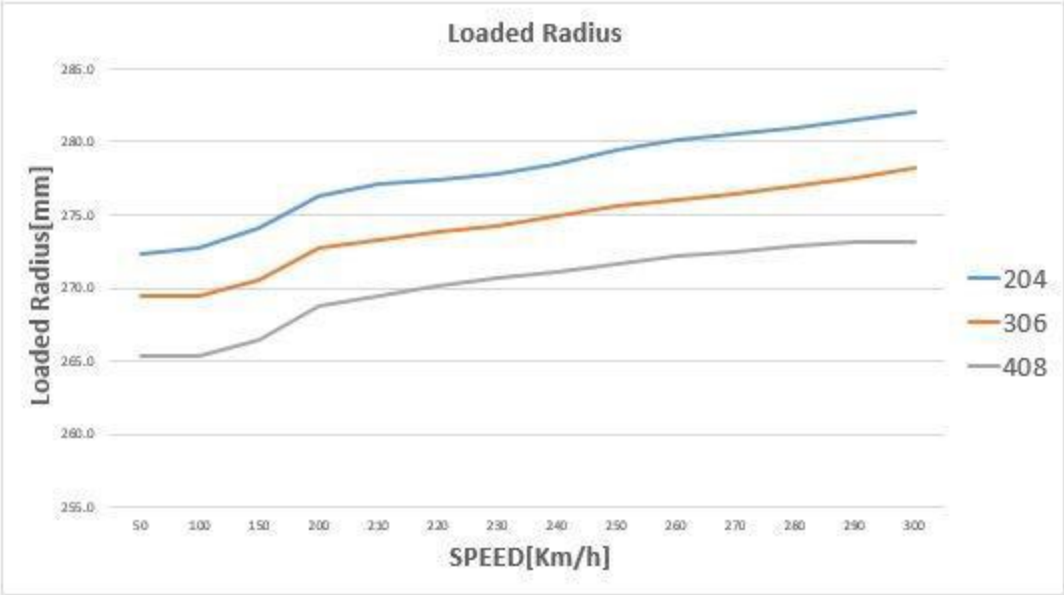

7.2.3.2.5 Dynamic measurements 280/580R13 Z217(12J) Rain @ 1.5Bar, CA 0.0°

Loaded Radius

Speed[Km/h] \ Load[N]	306	408	510
50	280.4	274.8	272.1
100	280.4	275.4	272.1
150	281.2	277.2	273.6
200	283.5	279.7	276.1
210	284.1	280.4	276.8
220	284.7	281.1	277.6
230	285.3	281.8	278.0
240	286.0	282.4	278.6
250	286.6	282.9	279.2
260	287.2	283.5	279.9
270	287.9	283.5	280.5
280	288.3	284.2	281.2
290	288.6	284.8	281.8
300	288.8	285.3	282.1

7.2.3.3 Operating Temperature

After driving, the temperature difference between the Inside and the outside of the tire must be between 20 degrees, and the temperature difference between the front and rear wheels must also be between 20 degrees.

Compound Working Temperature

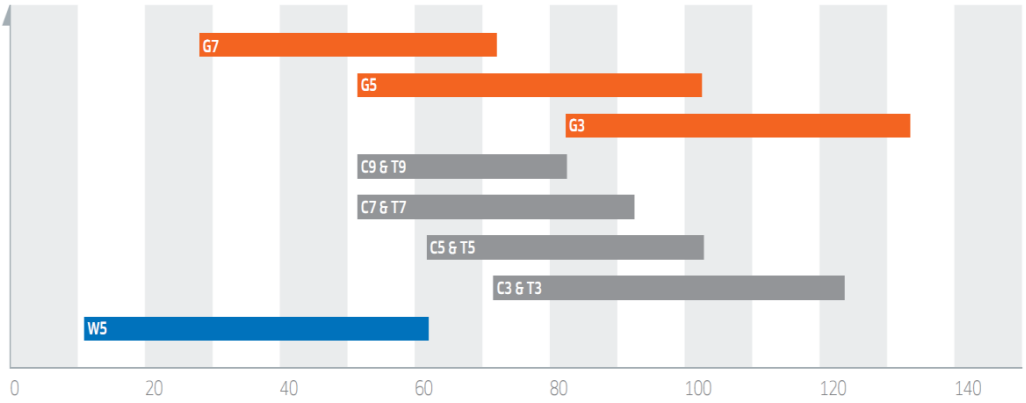

Normally optimum temperature is within a spread of about 20°C between inner and outer part of tread.
For example, In 90°C, Middle 80°C, Out 70°C.

7.2.3.4 Tyre Care Information (Technical Limitations)

- The value of the Camber used shall not exceed (Front -4.0° , Rear -3.0°) (Purpose: To secure Safety margin)
- The initial pressure shall be maintained at least1.0bar. (Purpose: To secure Safety margin)
- Dry air is recommended to avoid sudden pressure changes caused by humidity when inflating the inside of the tire.
- Set the Recommended (1.4~1.5bar) air pressure to the conditions of using.

Tyre Inflation Pressure	
Minimum Inflation Pressure(Front)	**1.0Bar**
Minimum Inflation Pressure(Rear)	**1.0Bar**
Recommended Hot Pressure(Both Axles)	**1.4~1.5Bar**
Car Setup Parameters	
Maximum Static Camber Front	**Qualifying:-4.0° / Race : -3.5°**
Maximum Static Camber Rear	**Qualifying:-3.0° / Race : -2.5°**

Mounting

Hankook Tire products should be mounted and installed on the car according to the directional arrows on the sidewall. After one or two heat cycles, the tires can be rotated on the car. Worn tires can be dismounted and flipped on the wheel to extend tread life.

Scuffing

The longevity and consistency of the grip level can be increased by properly scuffing a new set of racing tires. It is very important not to run hard for an entire session on new tires. Think of it like breaking in a new engine, or bedding in new brakes.
To scuff a set of tires, start by taking one or two moderately paced laps to gradually bring the tires up to operating temperature, and then run one hard lap followed by a cool down lap. The ideal situation would be to stop and remove the tires from the car, and allow them to cool down to ambient temperature before running them again.
When running an entire session on a new set of tires without stopping, one should still follow the scuffing procedure at the beginning of the session before turning laps at a fast pace. It's also very important to run a slower lap at some point in the middle of the session to allow the tires to cool off before running hard laps again.

Pressure

Moisture inside of a tire can cause excessive pressure build-up and handling problems. After purchasing a new set of mounted tires, the valve cores should be removed to purge out any moisture, and the tire should be inflated with dry air or nitrogen.
When switching from another brand of tires to Hankook tires, it is not necessary to change cold or hot inflation pressures.
Start with the same settings, and then make adjustments to achieve the desired handling characteristics that the driver prefers.
An approximate hot pressure target for DOT approved R-compound road racing tires is 40 psi. It could be a few pounds less for lighter cars, and a few pounds more for heavier cars. FWD cars may require higher inflation pressure in the front tires. 13" slicks for formula cars and sports racers should initially target for 22 psi hot. Changing hot inflation pressures to alter the handling characteristics of the car is a fine tuning adjustment. Improving the overall grip level should be done by tuning spring rates, dampers, anti-rollbars, ride heights, alignment settings, etc.

Temperature (°C)

Tread temperature will vary depending on ambient and track temperature, the type of circuit, and the type of car.
The temperature should be within a range of 70 to 105 degrees when measured in pit lane. Optimum grip level is at 80 to 95 degrees.
A probe type pyrometer is recommended for temperature measurements, and a consistent technique must be used.
Check the tires in the same location (inside, middle, outside) and in the same order (LF, RF, RR, LR) each time the car comes to pit lane.

The data should be recorded as follows to make it easier to interpret.
Depending on the width of the tire, the inside tread temperature should be 10 to 20 degrees hotter than the outside.

Out	FL	In	In	FR	Out
80	88	95	95	88	80
80	88	95	95	88	80
Out	**RL**	**In**	**In**	**RR**	**Out**

If the inside is too hot, camber may need to be reduced. If the outside is too hot, camber will need to be increased, or inflation pressure will need to be increased to prevent the tire from rolling over on the outside shoulder. If the front tires are hotter than the rear tires, it may show an under steer condition, and if the rear tires are hotter than the front tires, it may show an over steer condition.
This isn't the case for all types of vehicles.
The front tires on FWD cars are usually always hotter, and the rear tires on high horsepower RWD cars may be hotter due to wheel spin.
The tires should be relatively new when using treads temperature data to interpret car set up issues. Tires with a worn shoulder may give a misleading temperature spread across the tire because the thin area doesn't't hold as much heat as thicker areas.

Wear

In addition to utilizing tread temperature data to evaluate how the car and tires are performing; the inside and outside tread wear indicator pins should be measured with a depth gauge to determine if camber or pressure changes need to be made.
If the inside of the tire is worn more, camber may need to be reduced. If the outside is worn more, camber will need to be increased, or inflation pressure will need to be increased to prevent the tire from rolling over on the outside shoulder.

Heat Cycles

The number of useful heat cycles that a set of race tires should be run is dependent upon whether or not they were properly scuffed, ambient and track temperature, track surface, length of each track session, and most importantly => driving style.
Drivers that toss the car into the entry of a corner and slide through the middle and exit of a turn may have excessive tire wear and a reduction in the consistency of the grip level. A smooth driving style will result in faster lap times and better tire performance.

Storage

This advisory addresses the proper storage of competition tires in colder climates. The following tires are the subjects of this advisory; Hankook all racing tires. As seen in the picture below, tires stored and operated below freezing Temperature (32 deg F or 0 deg C) will lose rubber compound flexibility and may experience cracking when operated under such conditions.

lose rubber compound flexibility and may experience cracking when operated under such conditions.

Caution!

Rubber compound used in competition tires have unique properties that, when compared to non-competition tires, Caution them to lose some of their flexibility when sorted and operated at sub-freezing temperatures. This loss in flexibility can lead to potential cracking and other damage to the tire. To minimize the chances of this happening, consumers and installers are advised to follow these instructions during Sub-freezing conditions.

1. Do not operate the car with these tires, as the tires may suddenly fall.
2. Always store these tires indoors at temperatures above 32°F or 0°C.
3. Before mounting or dismounting, store these tires for at least 24 hours in a temperature-controlled environment of 68°F(20°C) or warmer.
4. Remove these tires from the vehicle and deflate to half the normal air pressure during prolonged periods of non-use storage.
5. Do not move a car that is in storage with these tires, as the tires may crack.
6. If storing outdoor, please avoid direct sunlight and remove it as soon as possible.

Safety Warning

Hankook Tire makes no expressed or implied warranty as to the fitness or merchantability of Hankook racing tires due to the varied and severe conditions under which operate, and shall not be liable for any damages arising out of their use. It is illegal and dangerous to sell and or use race tires on public streets that have not passed or ECE safety standards.
Hankook DOT-approved race tires meet the Department of Transportation performance requirements, but are not intended for highway use. DOT-labeled Hankook racing tires are designed for racing use only. The prohibited use of Hankook racing tires on public roadways may result in loss of traction, unexpected loss of vehicle control, or sudden loss of tire pressure, resulting in possible serious injury or death. The use of chemical treatments
such as tire "soaking" or tread "softener" to alter the tire carcass or tread compound of any Hankook racing tire could result in premature or catastrophic tire failure and serious injury or death. The use of Hankook racing tires on wheels that do not meet Tire & Rim Association standards can cause the tire and wheel assembly to fail and explode with force sufficient to cause serious injury or death.

8 BRAKE SYSTEM

8.1 TECHNICAL NOTES

8.1.1 Balance bar

Rotating the brake bias knob clockwise will shift the brake balance towards front by 1.5% per complete turn.

8.2 BRAKE SYSTEM SETUP

Master cylinder suggested configuration:

	FRONT DIA	REAR DIA
Standard	19.05 mm	20.64mm

The following table shows the front brake balance when the balance bar is set at the mid adjustment (master cylinders have the same distance from trunnion):

REAR / FRONT	5/8" (15.88mm)	3/4" (19.05mm)	13/16" (20.64mm)
5/8" (15.88mm)	50%	59%	63%
3/4" (19.05mm)	DO NOT USE	50%	54%
13/16" (20.64mm)	DO NOT USE	DO NOT USE	50%

8.3 Brake system Bedding-in

The brake bedding-in procedure is a process of repeatedly and quickly heating and cooling the brakes, in a way that the pad deposits a uniform layer of its material on the disk surface and to evenly remove the thin anti-corrosion coating of the disk.
Correct bedding-in procedure is necessary not only for optimum performance of the system, but also to avoid onset of judder (vibration felt through brake and steering).

Brake bedding-in process:

1. Check the disc before use, in particular its surface conditions. To avoid contamination during bedding, if needed, cleaning of the disk surface with sandpaper above FEPA 600, brake cleaner or similar is possible.
2. In order to prevent unpredictable heat transfer on disc surface, and resultant thermal deformation (cracks, vibrations) the bedding should be achieved by application of groups of constant pressure stops (for a total of about 30 stops) with gradual increasing of the initial speed (and total brake energy).
   These braking must be done far from the tyre adhesion limit (50÷60% of the max race pedal pressure) in order to achieve a corresponding gradual increase of torque and temperature to the brake system and promote a regular third layer deposit. Between the stops let the system to cool down to avoid overheating. During this phase the friction coefficient starts high and then decreases to the stabilization level, so in the first phase avoid too hard braking to avoid overheating.
3. Toward the end of the bedding the disc surface is become completely and uniformly settled and the friction efficiency optimized, so at this point no risk of uneven heat distribution and distortion should exist. After the constant braking pressure and the subsequent layer formation (step 2) a series of 4÷5 high deceleration stops are desirable in order to set up the layer and guarantee a correct functioning.

Be aware that incorrectly bedded brakes can reduce the controllability and the lifetime of the pads and discs. The maximum braking performance can only be achieved by correctly bedded brake parts.

This procedure should be performed on a safe part of the circuit, away from traffic, as you have to be able to repeatedly stop quickly.

9 COOLING SYSTEM

Cooling system pressure: 1.8 bar.

Colling system volume: 7.5lt (approx.)

10 FUEL SYSTEM

10.1 FUEL TANK

Fuel tank capacity: 60lt

It is recommended to protect the outer surfaces of the fuel bladder from scratching over carbon fibers, cutomers are invited to protect the carbon surfaces that are in contact with the bladder with PVC tape (i.e. Permacel) or Neoprene foam Sheet.

10.2 FUEL DRAIN PROCEDURE

Refer to chapter 3.5.2

- Button [6]: **MARK**, when pushed the ECU will register the input in the log file. Double click will activate fuel pump (for fuel drain purpose).

10.3 FUEL COUPLING

The feeding line to the engine is equipped with a safety dry-break:
Staubli SPT08.3655/L/JV
SPT08.7655/L/JV

The fuel tank port is equipped with a dry break

- Filling Port: Staubli N00916298 (on board)
- Mating Port:
  - Staubli N009 161 98 (fuel bottle)
  - Staubli SPT12.1658/L/JV (fuel machine)

SPT 12		Threads F	L (mm)	JV	JKV
Male thread socket		UNF 7/8 - 14" JIC DASH 10	19	SPT 12.1657/L/JV	SPT 12.1657/L/JKV
		UNF 1 1/16 - 12" JIC DASH 12	21.9	SPT12.1658/L/JV	SPT 12.1658/L/JKV
Non threaded socket		-	-	N 009 161 98	N 010 830 07

10.4 FUEL MACHINE OPTIONS

An optional system can be installed to have a breather valve dry coupled, refer to page 24D of the spare part catalogue.

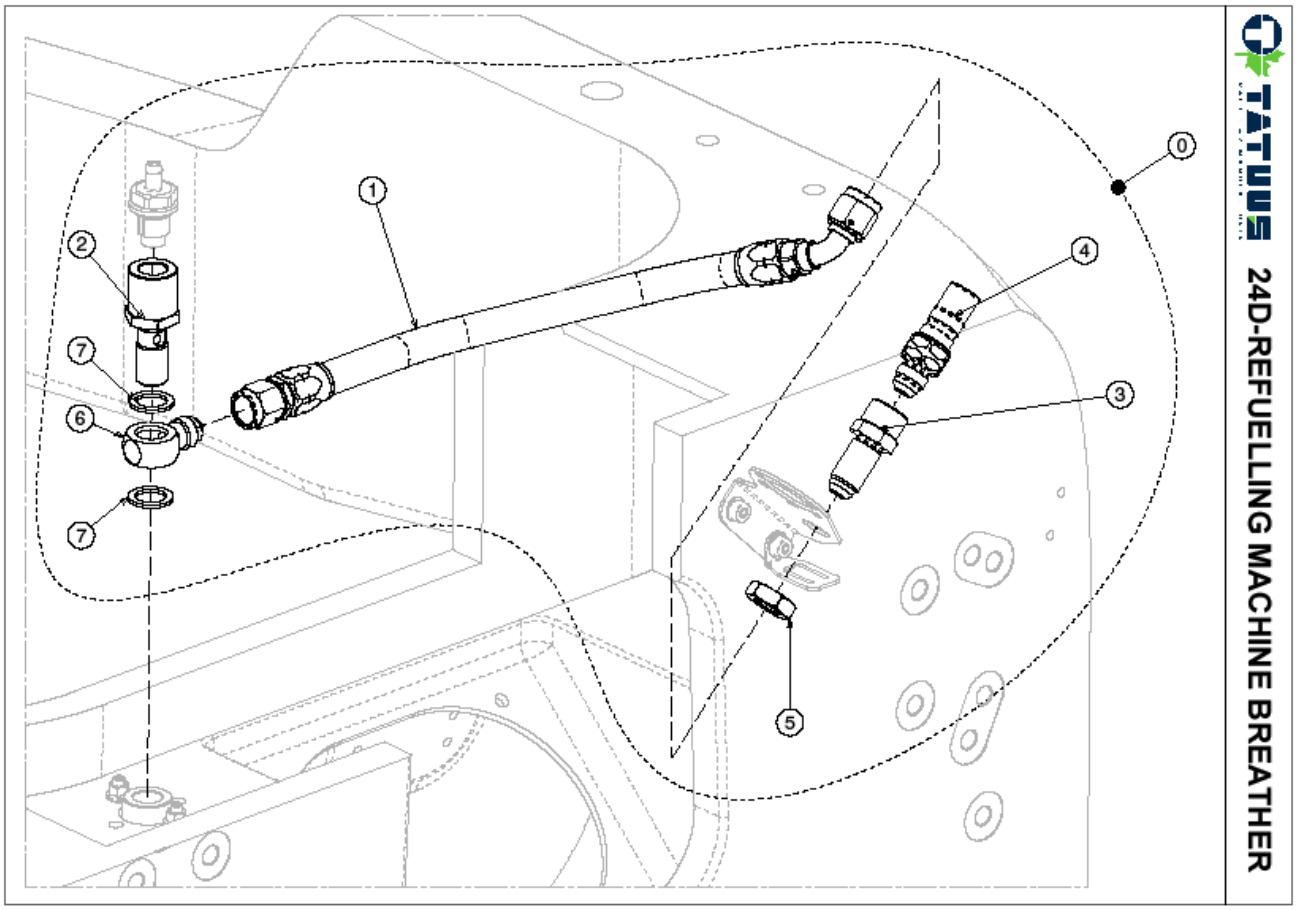

The breathing line to the tank is equipped with a safety dry-break Staubli SPT08.7655/L/JV, the mating port (machine side) have to be SPT08.3655/L/JV.

11 OIL SYSTEM

11.1 ALFA ROMEO OIL TANK

The oil tank is located within the gearbox bellhousing, some oil may overflow into the catch tank, regularly drain and clean it to optimize oil level.

We recommend to respect the following procedure in order to have a consistent level measurement:

- Turn on the engine;
- Warm up temperatures (oil at 80°C);
- Run the engine for 30 second at 3000rpm;
- Turn off the engine;
- Measure the oil level: from the filler plug plate the oil level should be **180mm**.

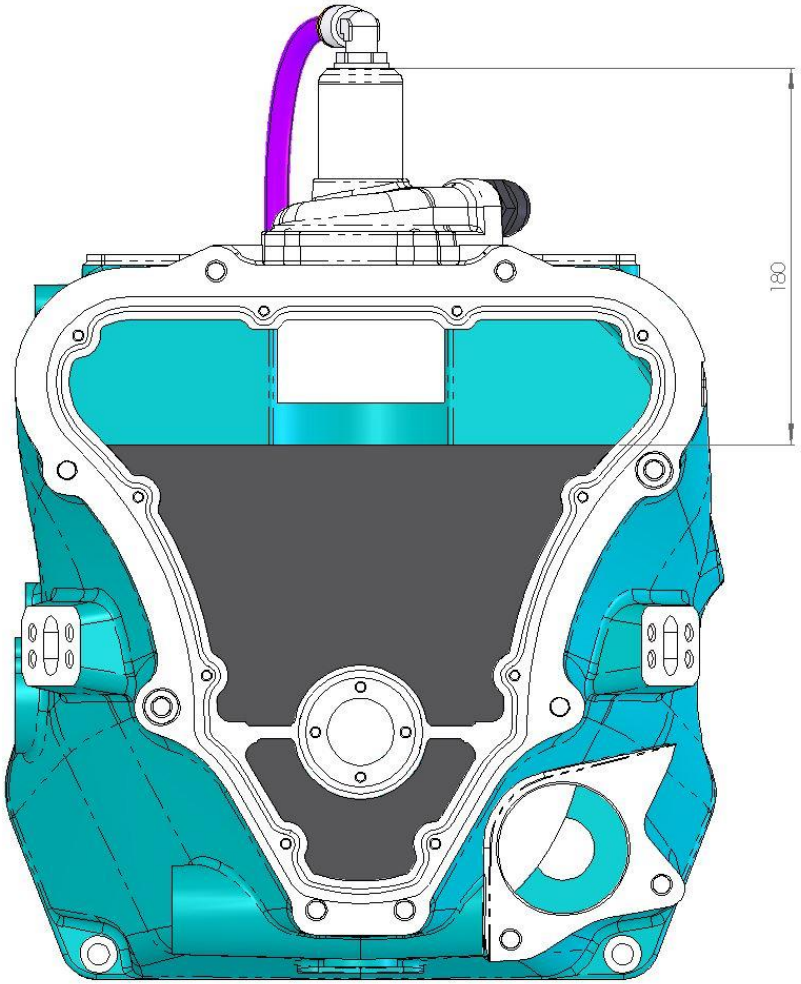

11.2 Renault Oil tank

The oil tank is located within the gearbox bellhousing, some oil may overflow into the catch tank, regularly drain and clean it to optimize oil level.

We recommend to respect the following procedure in order to have a consistent level measurement:

- Turn on the engine;
- Warm up temperatures (oil at 80°C);
- Run the engine for 10 second at 3000rpm;
- Turn off the engine;
- Measure the oil level: from the filler plug plate the oil level should be **180mm**.

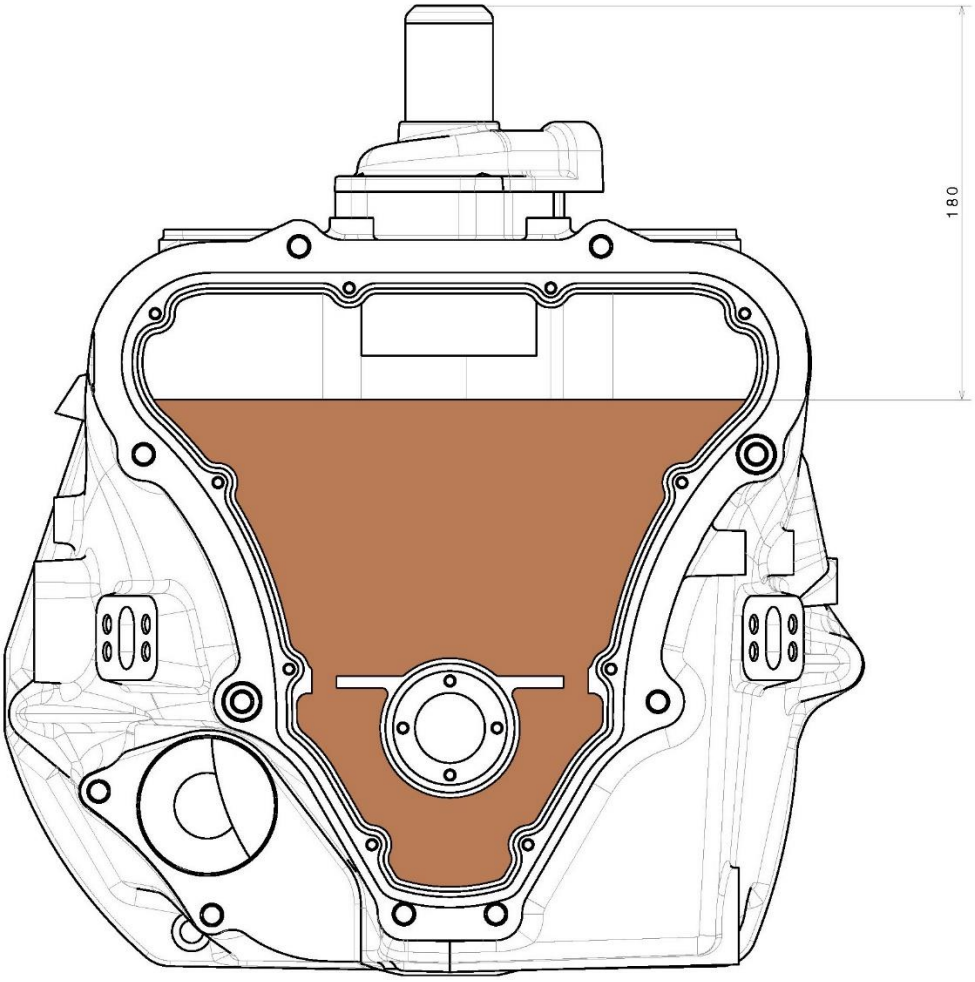

11.3 TOYOTA OIL TANK

The oil tank is located within the gearbox bellhousing, some oil may overflow into the catch tank, regularly drain and clean it to optimize oil level.

12 ELECTRIC SYSTEM

12.1 OVERVIEW

The wiring loom is split in four main parts:

- Chassis harness
- Engine harness
- Gearbox harness
- GCC/EGA harness

The power system (+12V) includes

- Battery: installed in the cockpit behind driver seat
- Main switch: electrically operated, located on the battery carrier
- Generator: installed on the engine
- Powerbox: current distribution is provided to the vehicle by a 9 lines power distribution module
- Starter: direct power connection
- ESA (gear actuator): fused power connection

12.2 MAIN SWITCH

The master switch is actuated by the cockpit panel and emergency switches, connection schematics:

A: +12V Generator, +12V Chassis loom ring;
B: +12V Battery, Main switch coil supply;
C: chassis loom connector.

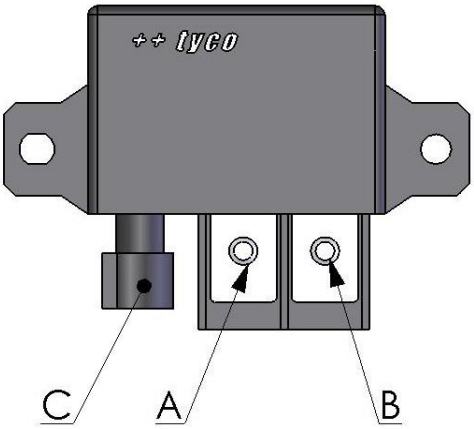

12.3 Battery and Alternator

Battery is a crucial component interacting with engine and gearbox management systems always pay attention to its charge level especially if you are running reset procedures.

NOTE: running engine at low revs will not charge battery!

NOTE: if the battery power is low high current consumptions (like a gearshift actuation/recharge) can result in an engine stall, keeping higher revs and generator in charge will fix this occurrence.

12.3.1 Battery installation

It is recommended to apply a minimum of 5mm of padding, below and on the top of the battery case, and a 2mm padding per side in order to protect the battery from excessive vibration.
The padding also protects the battery casing from getting damaged. It is recommended using closed cell neoprene.
It is also important that when strapping the battery in place, the padding is not excessively compressed, as this would minimize its effect.
We also recommend that the battery cables are fully supported so they do not add any extra stress onto the battery terminals. If they are too short, the engines movement when revved will be transferred through the cable to the battery. If the cables are too long, they may have weigh enough and move when accelerating, braking or cornering, adding extra stress to the battery terminals.

A battery, which has been damaged due to vibration, will show a good open circuit voltage (12.8v or more), but when loaded, the voltage drops to zero. The battery casing usually also shows signs of wear on the casing.
It is also important that when attaching cables to the battery terminals, that the retaining nut is tightened to 4Nm and no higher.

12.3.2 Jump battery

It is suggested the use of a jump battery during the engine crank, **the jump battery must be plugged in only when the main switch is ON.**
The rear wing pillar has a double thread suitable for the Anderson SB50 plug.

12.4 POWERBOX

The PSD9 powerbox manages the current distribution on the power lines listed on the following paragraphs.

User devices connected to customer available connections (AUX ports) must not exceed 5A in total and 2A per power supply pin.

WARNING: **Do not disconnect the powerbox connection when power is ON!**

Diagnostic and functional information are available in the logger system, see chapter for details.

12.4.1 Alfa Romeo configuration

Line #	**Log name** *(name on Steering Wheel)*	**User list**
1	PSD_Fuel *(Fuel)*	Fuel pump
2	PSD_FED *(Federation)*	Rain Light ADR Transponder
3	PSD_CU_LP *(LP Elec)*	ECU GCC Dashboard
4	PSD_Engine *(Engine)*	Lambda Turbo Valves Engine Valves
5	PSD_AUX *(Aux)*	Beacon AUX ports
6	PSD_Coils *(Coils)*	Engine coils
7	PSD_CU_HP *(HP Elec)*	Throttle valve GDI Injection
8	PSD_Starter *(Starter 1)*	Engine starter
9	PSD_Starter *(Starter 2)*	Engine Starter (redundant)

12.4.2 Renault configuration

Line #	Log name *(name on Steering Wheel)*	User list
1	PSD_Fuel *(Fuel)*	Fuel pump
2	PSD_FED *(Federation)*	Rain Light ADR Transponder
3	PSD_CU_HP (1/2) *(HP Elec)*	Throttle valve GDI Injection ECU GCC Dashboard
4	PSD_CU_HP (2/2) *(LP Elec)*	
5	PSD_AUX *(Aux)*	Beacon AUX ports
6	PSD_Coils *(Coils)*	Engine coils
7	PSD_Engine *(Engine)*	Lambda Turbo Valves Engine Valves
8	PSD_Starter *(Starter 1)*	Engine starter
9	PSD_Starter *(Starter 2)*	Engine Starter (redundant)

12.4.3 Toyota configuration

The electric system of the Toyota engine version does not use the standard powerbox, please refer to engine management support.

12.5 WIRING LOOM

Refer to pdf files for electrical schematics.

12.5.1 Radio plug

A radio connector is provided in the chassis wiring, it provides a 12V power and repeat the switch of the steering wheel on pins #2/#3.
Mating connector DTM04-4P.

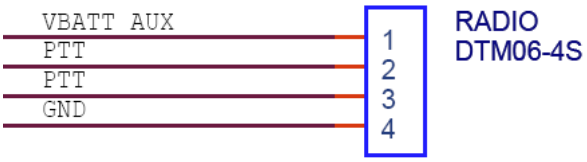

12.6 SENSORS

The T318 chassis is delivered with the following chassis sensors:

- Pedal position sensor: twin way contactless rotary sensor.
- Brake pressure sensors: 100bar pressure sensor.
- Clutch pressure sensors: 100bar pressure sensor.
- Steering position sensor: contactless rotary sensor.
- Damper displacement sensors: 50mm linear potentiometer
- Front wheel speed sensors
- Gear position sensor: contactless rotary sensor.
- Gear actuator sensor: contactless rotary sensor.
- Paddle shift position sensor: hall effect position sensors

Further available options are:

- ADR: wiring loom compatible with EMM units (Micro ADR), plug available behind the driver's back.
- External accelerometer: CoG installed two axis accelerometers. Plug available behind the driver's back.
- GPS unit: GPS 10Hz unit compatible with Magneti Marelli data logger, standard and high gain antennas available. Plug available at the front end of the chassis, antenna to be installed on the front damper deck below the Kevlar patch of the damper cover.
- Video system: AIM video system configured compatible with the Magneti Marelli data stream, the system is supplied with a junction loom to be connected to the plug CAN AUX behind driver's seat.

12.7 VREF LIST

12.7.1 Alfa Romeo configuration VREF list

VREF 1	VREF 2	VREF 3	VREF 4
Front Brake Pressure	Throttle Pedal (B)	Throttle Pedal (A)	Front Left Damper Pos.
Rear Brake Pressure	DBW	Oil Pressure	Front Right Damper Pos.
Steering Position	SMOT	Rail Pressure	Rear Left Damper Pos.
Gear Position	Cam IN	Cranckase Pressure	Rear Right Damper Pos.
Clutch Pressure	Cam EX	p/T fuel	Accelerometer
		Manifold Pressure	
		Turbo Pressure	

12.7.2 Renault configuration VREF list

VREF 1	VREF 2	VREF 3	VREF 4
Rail-P	E-WasteGate	Accelerometer	F Brake-P
Throttle	P/2-2	FL Damper	R Brake-P
Oil-P	P/2-1 T/2-1	FR Damper	Steering Pos
Pedal A	Gear-Pos	RL Damper	Baro-P
Pedal B	Clutch-P	RR Damper	N-Turbo
CRANK			
CAM IN			
CAM EX			

13 ENGINE

For any technical information contact the engine tuners.

14 TRANSMISSION

14.1 RATIO CHART

Here below the ratio options:

Final drive Ref.	
Secondary shaft	9
Crown wheel	30

Reverse gear	
Primary shaft	14
Idler	22
Secondary shaft	47

14.1.1 Gear option 01

Gear	Ratio
16/36	2.25
16/25	1.56
22/27	1.23
31/32	1.03
21/19	0.90
29/24	0.83

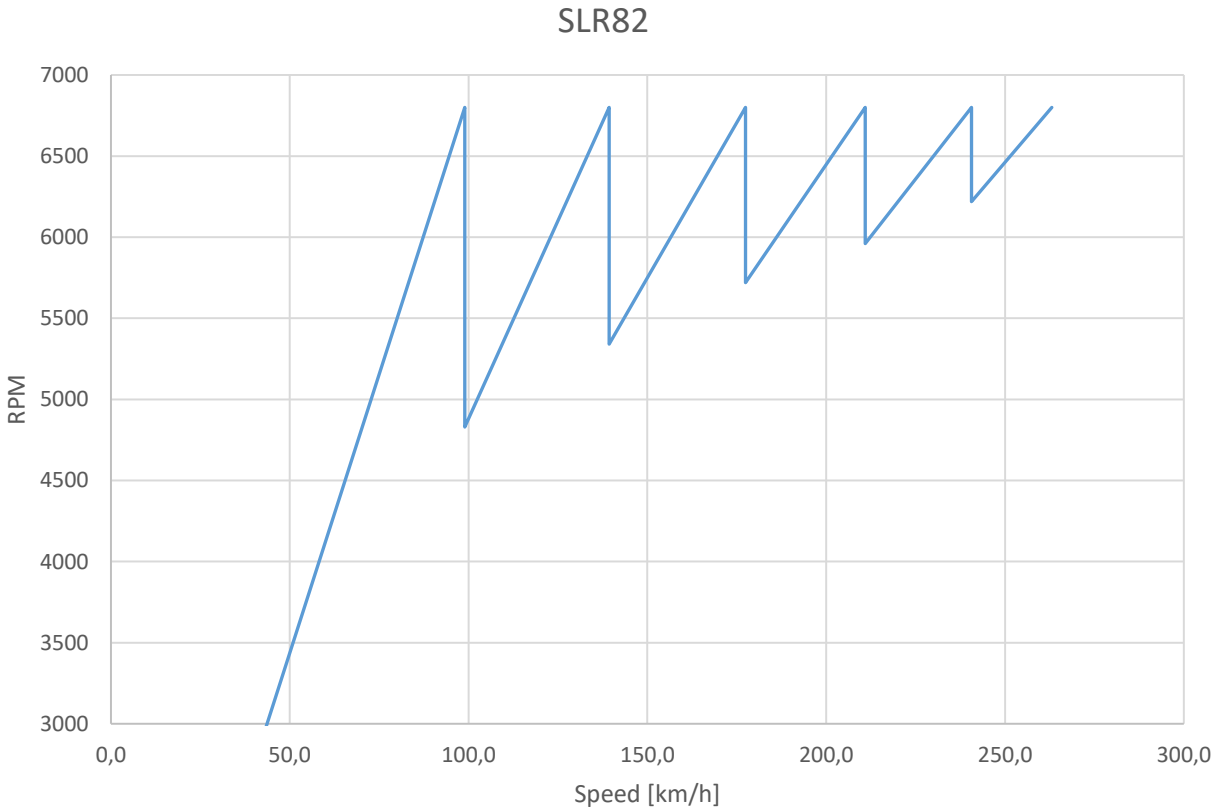

14.1.2 Gear Option

Gear	Ratio
16/36	2.25
16/25	1.56
23/29	1.26
26/28	1.08
26/25	0.96
23/20	0.87

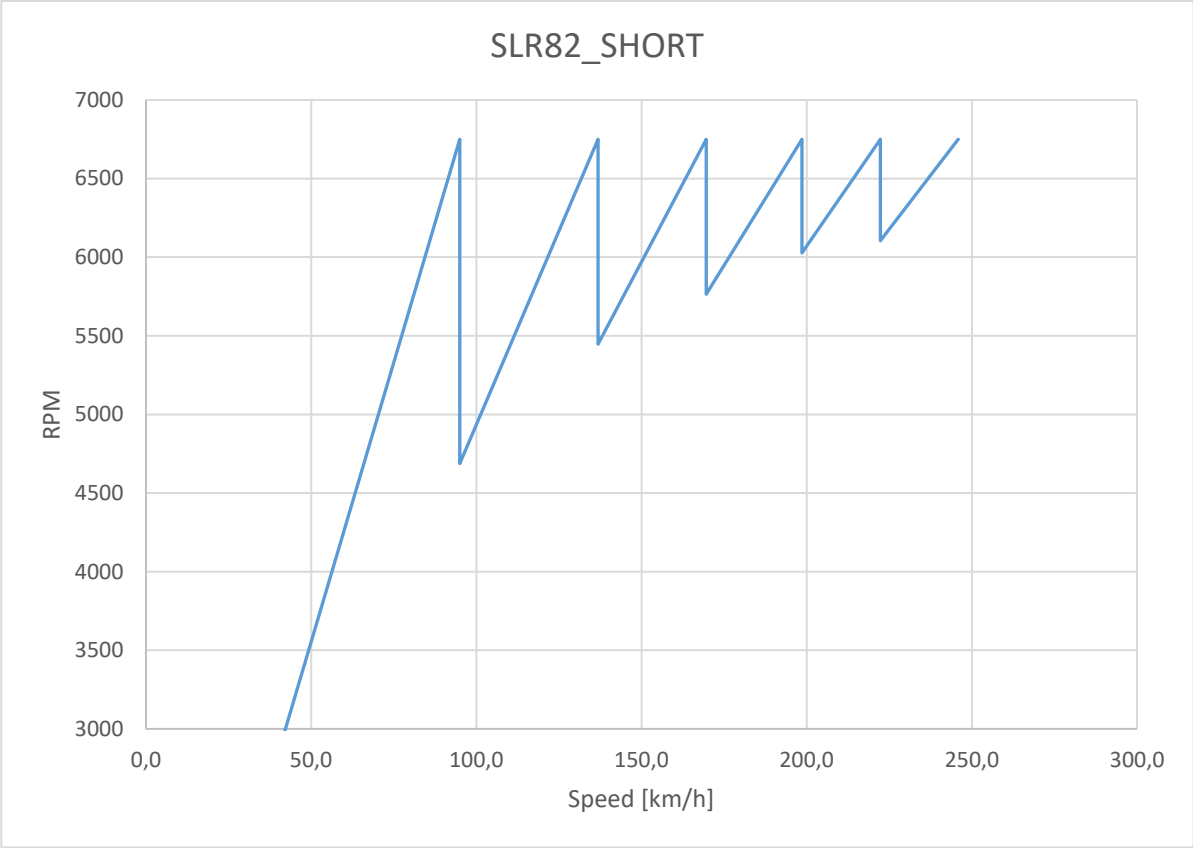

14.2 DIFFERENTIAL

ZF type self-locking differential with triple friction discs and pressing plates with ramps acting symmetrically or not, for driving or braking condition.

The following table summarize the options available with the first equipment ramp set:

Pn.	F19103191
Coast	**Power**
70° (std)	65° (std)
65°	70°
70°	80°
80°	70°

The preload is applied by a belleville washer pn. F1910313 and its carrier spacer F1910307-4.4 available in three different thicknesses:

- F1910307-4.2
- F1910307-4.3
- F1910307-4.4

Note: *An approximate reduction of the preload about 15% will be noticed after the first 60 kilometres.*

Note: *The cold measured preload (workshop) is approximately 15% higher than that measured hot.*

14.3 LUBRICATION

Oil capacity: 1.8 L + cooler circuit

1rst drain	Drain frequency	Viscosity
After a 50Km running-in	Each meeting	75W140

14.4 PARTICULAR PRECAUTIONS

No additives should be added to the oil. The resulting consequences are not in any circumstances covered by SADEV.
When topping up the rear differential oil, do not mix any other oil with that already in the box.

14.5 STORAGE AND USE

Be particularly careful with any bottles which are open when used:
Close the bottle again properly after use to prevent the introduction of water or dirt.
Store bottles horizontally, protected from severe weather.
Do not store bottles close to a washing station.
Do not decant the oil into larger containers.

14.5.1 Washing under pressure

When the rear differential is removed, seal all openings correctly to prevent the ingress of water into the rear differential.

14.6 GLUE COMPONENTS

Glue components and tightening torque are shown in the 3D exploded view, refer to paragraph 14.11.

WARNING:
Glue components have been chosen during tests sessions. Only 'Loctite' brand components must be used. Sadev can't ensure consequences of false glue component choice.

14.7 SPECIAL TOOLS

IMAGE	***PN.***	***DESCRIPTION***
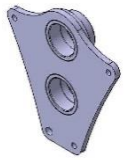	FOUT9047007	Anti-splay plate
	FOUT9047005	Fork adjustment tool
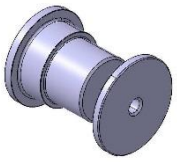	FOUT1910300 FOUT1910001	Compression tool mechanism
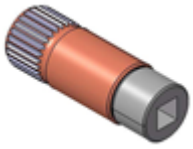	FOUT9004606	Preload adjustment tool
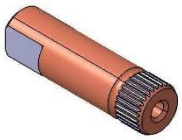	FOUT9004604	Preload adjustment tool
		CHc M6x70 Bolt
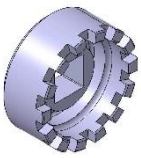	FOUT9045201	Tool for shaft nut

14.8 GEAR MAINTENANCE

14.8.1 Removal

- Drain gearbox through lower drain plug.
- Loose the 10x Simmonds nuts M8 retaining the cover plate.
- Remove the cover plate.

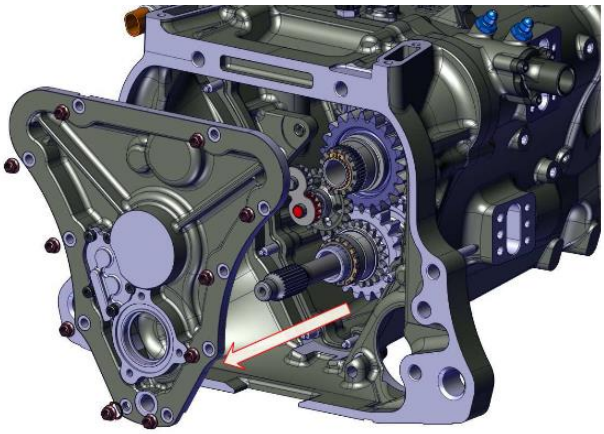

- Remove the axis of fork, circlips and nuts stopping then engage 2nd gears manually.

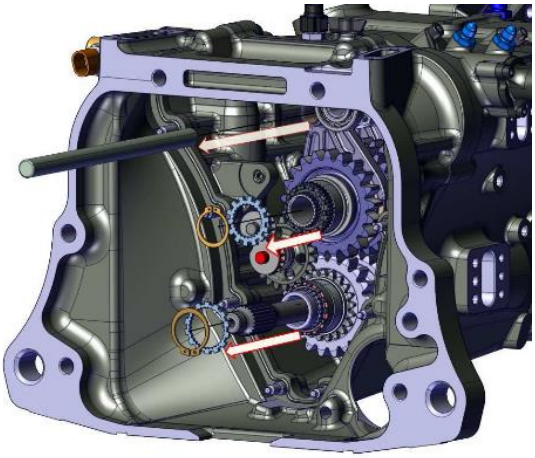

- Assemble the anti-splay plate. (FOUT9047007)

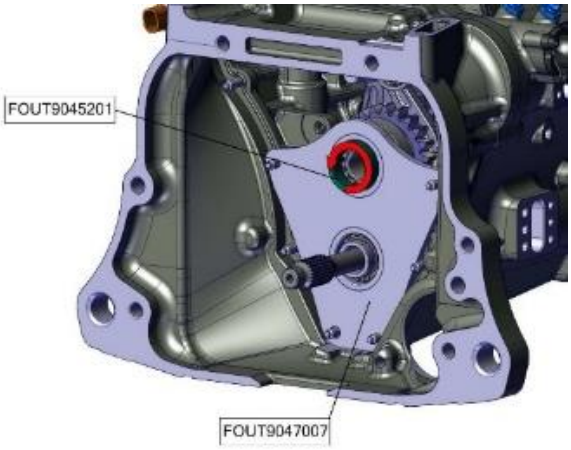

- Loose the 2x nuts (primary and secondary) with the screwing socket FOUT9045201
- Remove the anti-splay plate.
- Remove the parts one by one noting the direction of initial assembly.

14.8.2 Refitting

- Clean and check condition of parts.
- Lightly lubricate the forks and the needle roller bearing cages using gearbox oil.
- Replace gears one after the other in the reverse order from removal. For new gears, put the reference of the gears of the primary shaft towards the operator.
- Engage 2nd gear to prevent gearbox turning.
- Assemble the anti-splay plate. (FOUT9047007)
- Clean and degrease threads on shafts and screws, then use copper grease.
- Screw primary shaft bolt and secondary shaft nut to torques: **18 daN.m**
- Reinstall the splined washers & the circlips.
- Replace forks in initial locations.
- Assemble the cover plate while making turn shaft to ensure that the gear of the pump is engaged.
- Tighten the Simmonds nuts with 2.5 daN.m

14.8.3 Selector fork adjustment

Each time gears are dismantled check the fork tuning: after tightening the secondary shaft nut, install the fork adjustment tool (FOUT9047005).

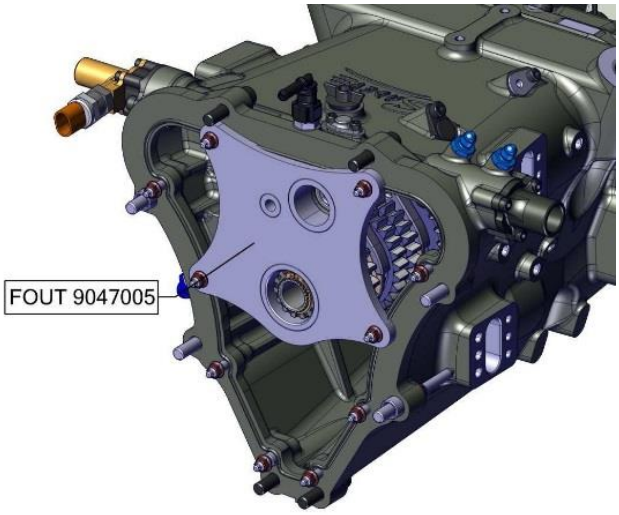

Engage all the gears in order to check that shifting is working well and forks do not push the dog ring on its gear wheel.
Make this check turning by hand the dog ring and its relevant gear.

(For example, engage the 3rd gear, then check that there is not excessive friction between the 3rd to 4th dog ring and the 3rd gear ratio).

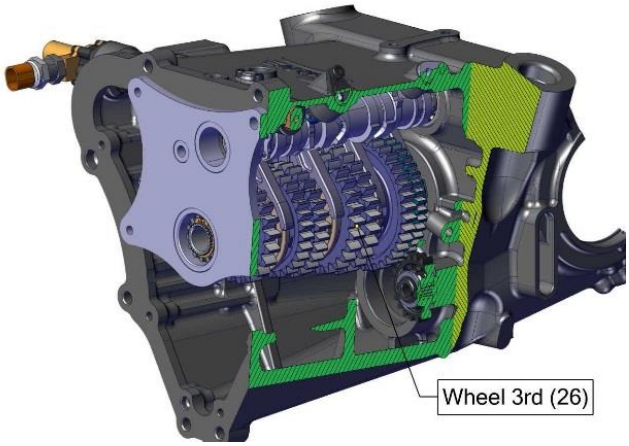

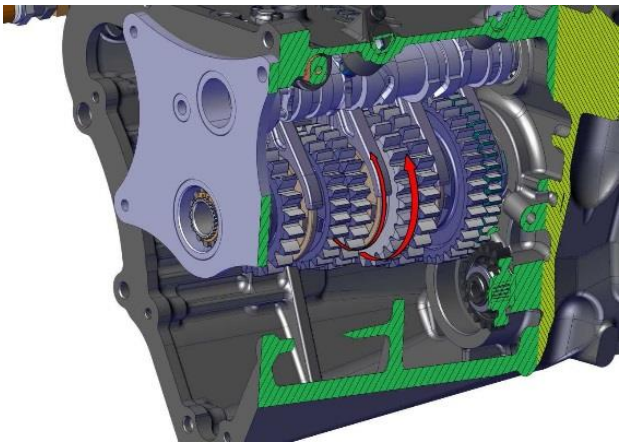

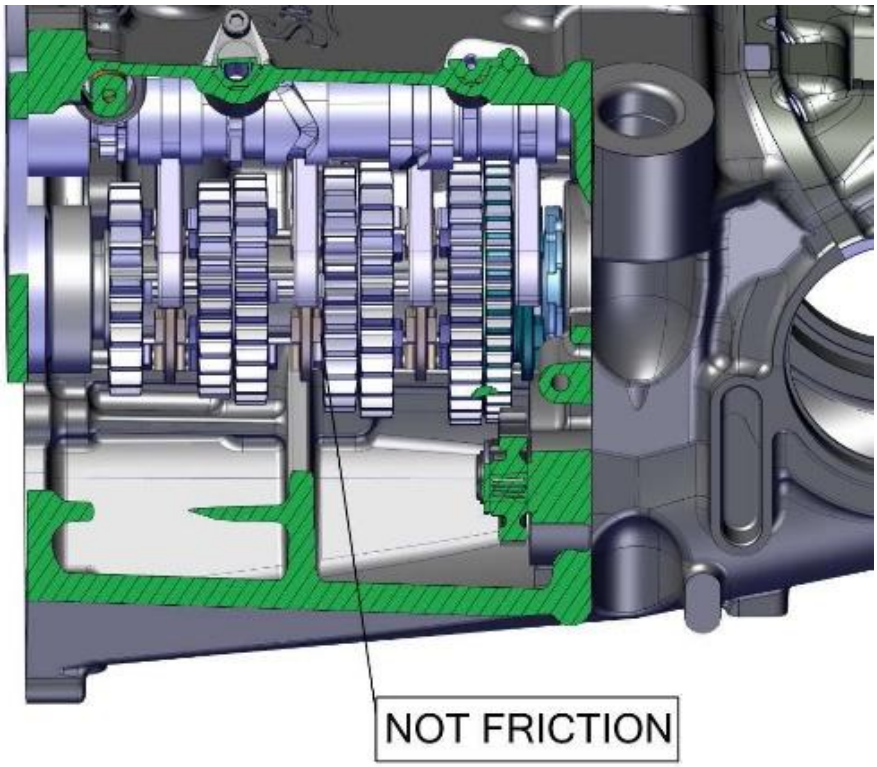

If excessive friction is found during checking, note which gear is concerned and follow this procedure:

- Disassemble the gears and change the gear cluster shim:
  - Replace the shim with a thinner one if Reverse, 1st, 3rd, 5th gears are concerned
  - Otherwise replace the shim with a thicker one.
- Reassemble the gears and check again until the friction disappears.

14.9 Differential

14.9.1 Removal

- Disconnect potentiometer.
- Drain the box through the lower drain plug.
- Remove differential housing.
- Extract the differential assembly.

14.9.2 Dismantling the differential elements

- Compress the differential using the adapter (FOUT1910300), the compression washer (FOUT1910001) and the bolt CHC M6x70.
- Remove the circlips (1) situated in front of the differential lid, then remove the adapter and the compression washer (FOUT1910300 & FOUT1910001).
- Remove one by one all the components inside the differential noting their direction and the order in which they are assembled.

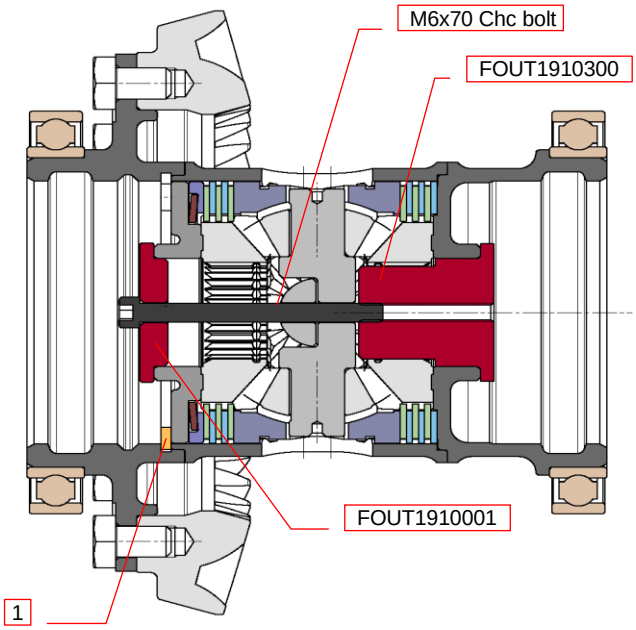

14.9.3 Refitting the differential elements

- Clean and degrease the parts, check their wear and replace them if necessary.
- Lubricate with gearbox oil and put one by one the components inside the differential case, respecting the direction and the order noted during the disassembly.
- Compress the differential with tools FOUT1910300 et FOUT1910001 and reassembly the circlip [1].

14.10 CROWN-WHEEL REPLACEMENT

14.10.1 Secondary shaft

- Drain the box through the lower drain plug.
- Remove primary shaft and secondary shaft (see paragraph 14.8.1).
- Remove differential housing (see paragraph 14.9.1).

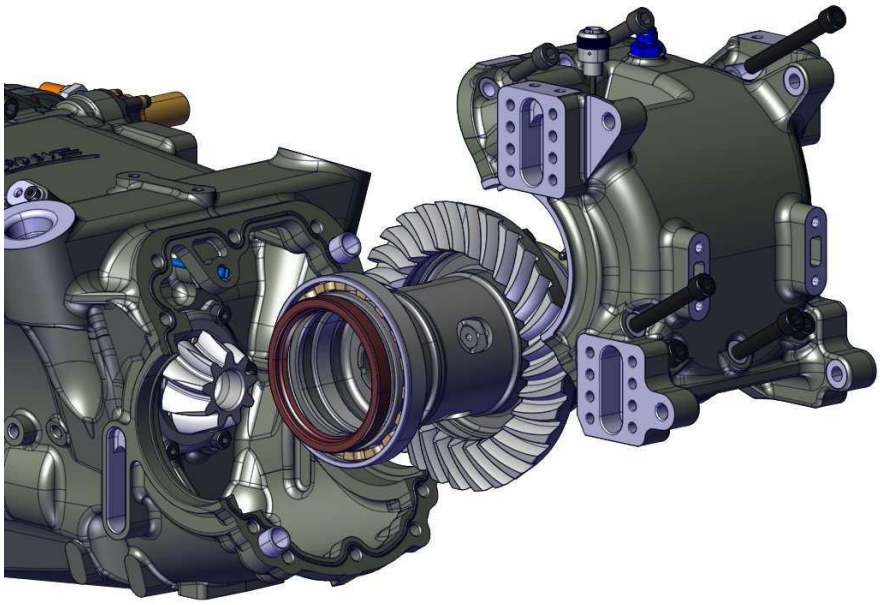

- Using a mallet, remove the secondary shaft and the NU207 flange.

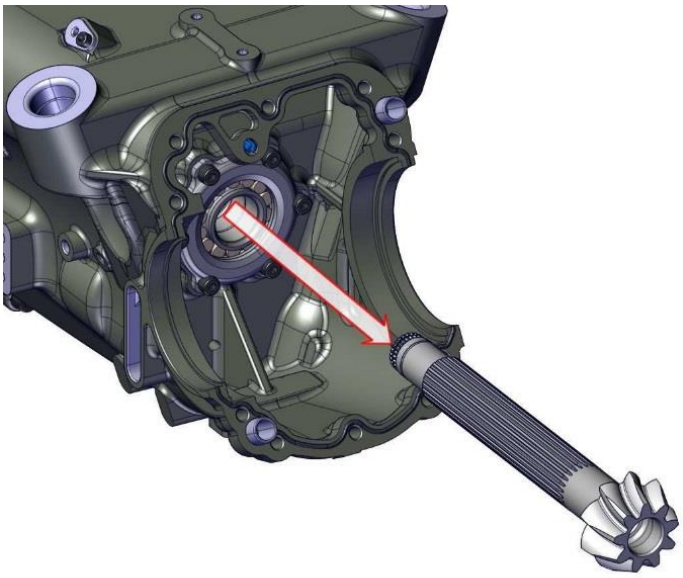

- Remove the 6x M8 bolts, heating them. Clean the threads used for the NU207 flange.
- Use a bearing extractor to remove the NU207 roller bearing.
- Remove the QJ207 bearing (pushing with one of the internal races of the bearing)
- Remove the O-ring seal (1).

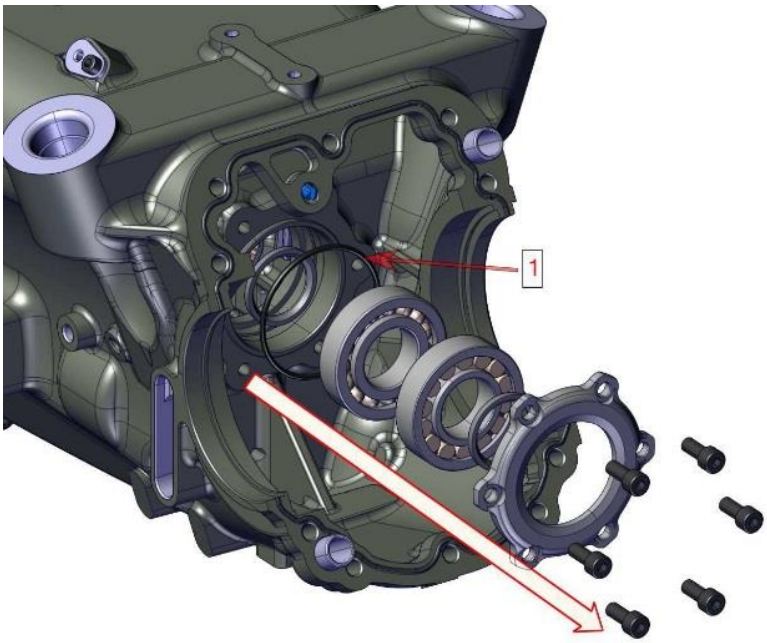

- Check their wear (replace if necessary).
- Clean the housing of the bearings.

In the main housing, two dimensions are marked (as shown on the picture), note the smallest (usually around 137.25): this is dimension "**A**".

On a flat plane, pile both the new bearings, and note their combined height: this is dimension "**B**".

AD = assembly dimension, this assembly dimension is printed on the secondary shaft (theoretical measure **99.64**).

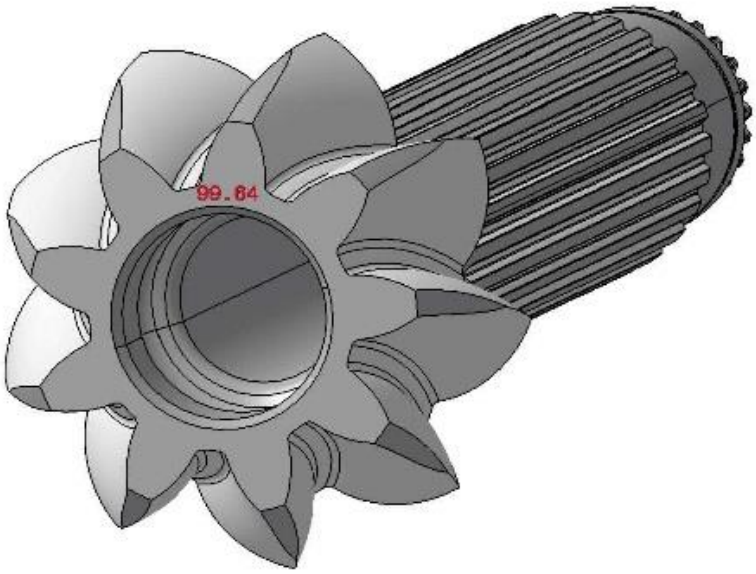

The thickness “C” of the secondary shaft shim (2) is calculated as follows:

$$C = A – AD - B$$

Assemble the shim being the closest (F1910205) to the calculated thickness “C” on the secondary shaft. Press fit the inner race of the NU207 bearing on the secondary shaft.

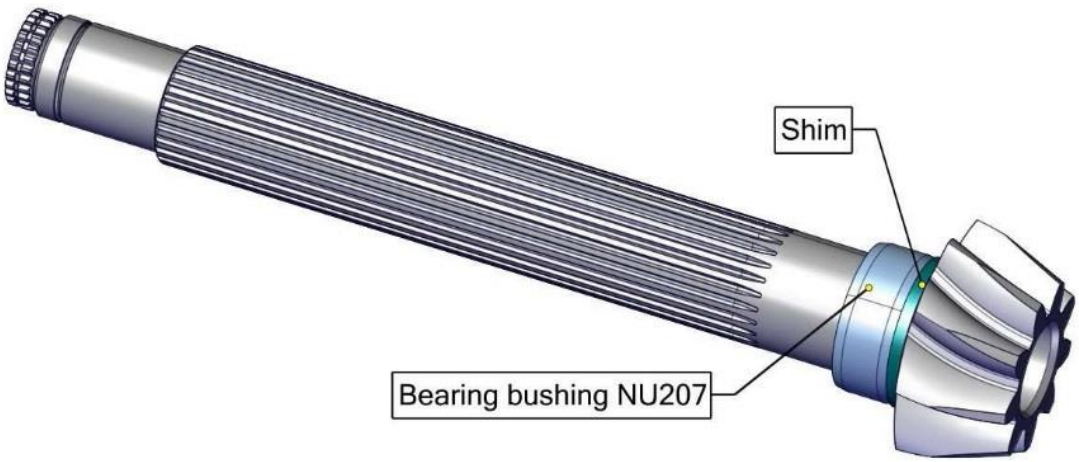

In the casing:

- Set in place a new O-ring on (1) the chamfer of the gear casing located on the housing of the QJ207 bearing.
- Press fit the 4-point contact bearing QJ207
- Fit the NU207 bearing (2) in the casing.
- Place the NU207 flange on the housing, add some Loctite 270 on the M8 bolts and tighten them to 2.5 daN.m.
- Fit the shaft through the bearings using a mallet to set it in place.
- Refit the gears. Do not close the gearbox, do not fit the nut locking washer and the circlips immediately.

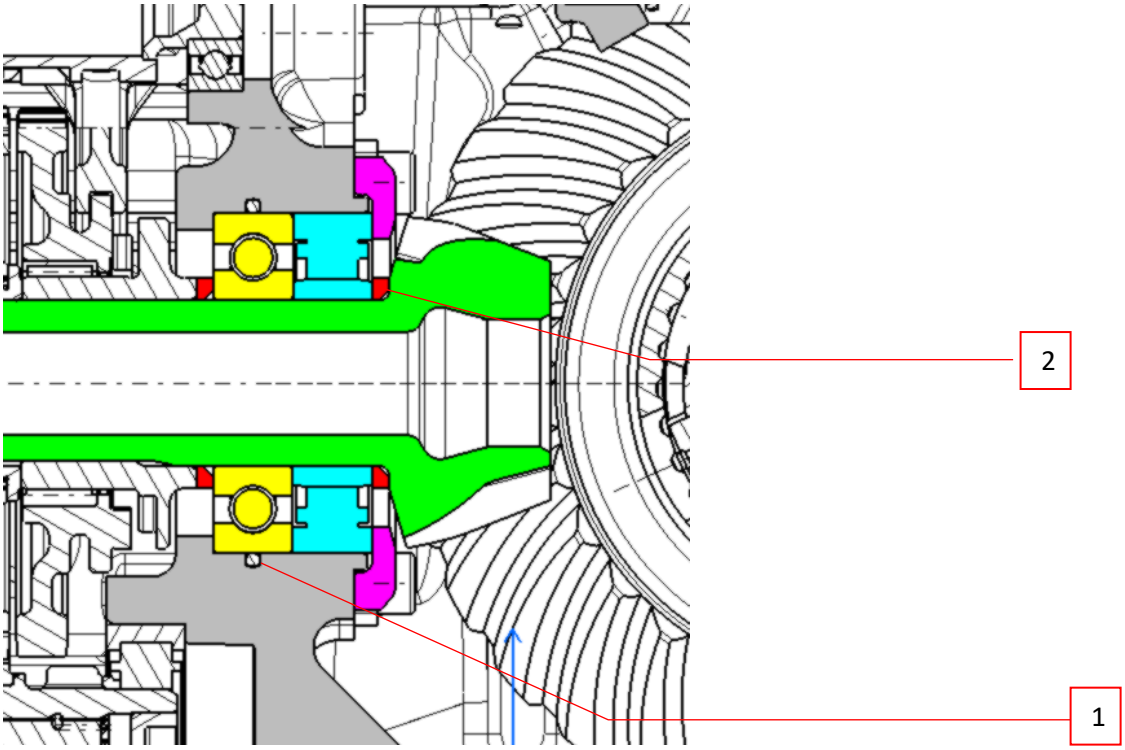

.

14.10.2 Crown

NOTE: In the described procedure, the differential case is supposed to be empty. Press remove both bearings on the differential case (1).

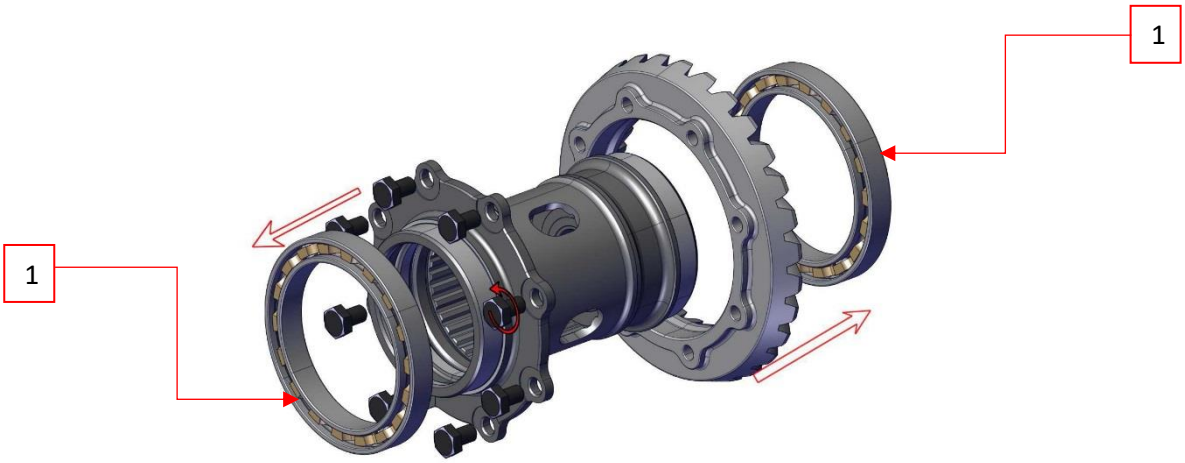

- Unscrew and remove the 8x M10 bolts of the crown by heating them.
- Remove the crown from the differential.
- Degrease the differential case and check it carefully (bearing contact patch, splines, etc). Change it if excessive wear or damage are observed.
- Degrease the new crown.
- Fit the new crown on the differential case. Put some Loctite 648 on new 8x M10 bolts and tighten them to 9 daN.m.
- Press fit the bearings (change them if damaged during disassembly) on the differential case carefully position them on the dedicated surfaces of the case.

In the main housing, two dimensions are marked (as indicated on picture), note the highest (around 170.75). This is dimension "**X**".

Measure the highest distance between the external races of the bearings assembled on the differential case and note it: this is dimension "**Y** "

The combined thickness of both crown positioning shims (2a and 2b) is calculated as follows:

$$Z = X + 0.1 - Y$$

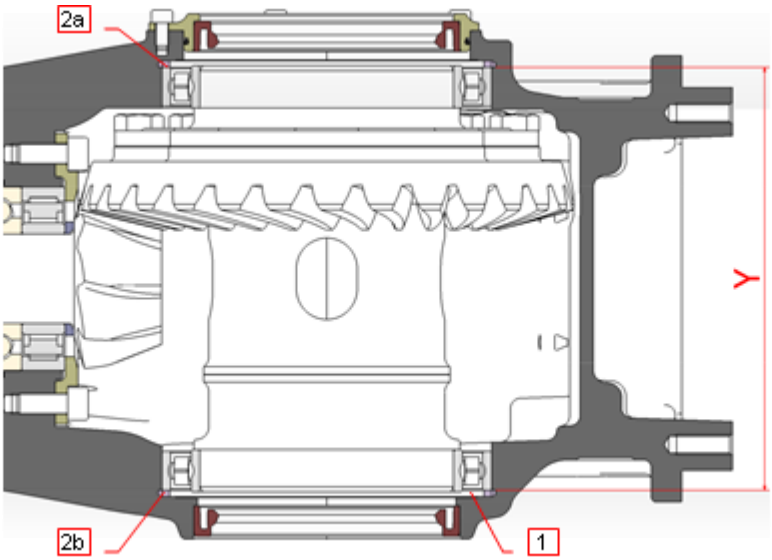

Fit inside the main housing the differential case and the two crown positioning shims. The shims must be put between the main housing and each of the 2 bearings (refer to following view). At the first attempt, use two shims of similar thicknesses.

NOTE: The total thickness of both crown positioning shims must always be as close as possible of the calculated dimension Z.

Measure the clearance between the teeth of the final drive pinion and crown. Take 5 to 8 measurements on multiple turns of the secondary shaft. The average value must be included between 0.01mm and 0.06mm.

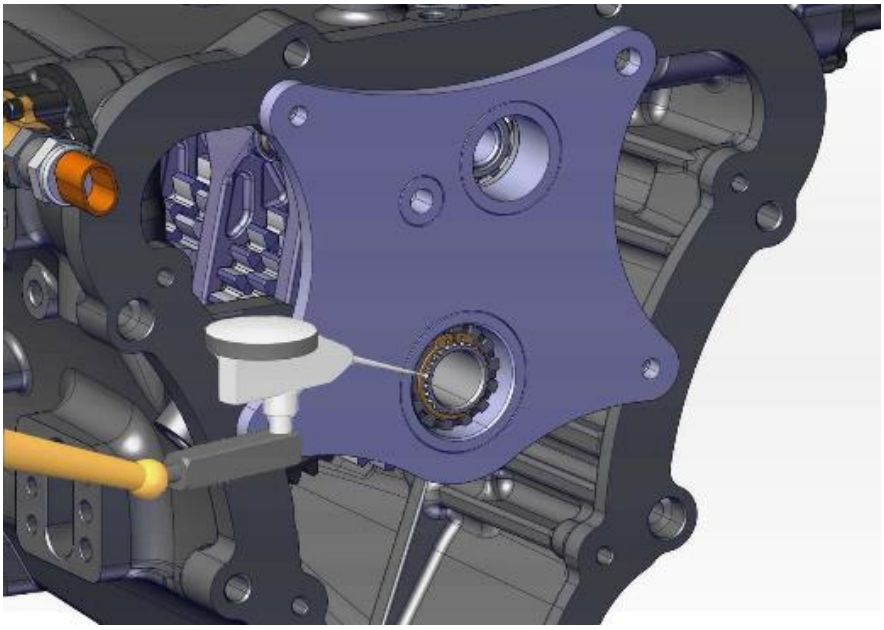

- If it is lower than 0.01mm: replace the crown side shim (2a) by the next thinner shim available, and replace the opposite shim by the next thicker shim available (2b).
- If it is higher than 0.06mm: replace the crown side shim (2a) by the next thicker shim available, and replace the opposite shim by the next thinner shim available (2b).

Repeat the procedure until getting into the allowed clearance interval.

Unscrew and remove the 10x M10 bolts of the differential cap, glue them with Loctite 243, and tighten them at 5.5 daN.m

Change the O-ring seal of the seal plate. Then fit the seal plate on the gearbox housings.

14.11 EXPLODED VIEWS

Refer to spare catalogue for part numbers

14.11.1 Layshaft

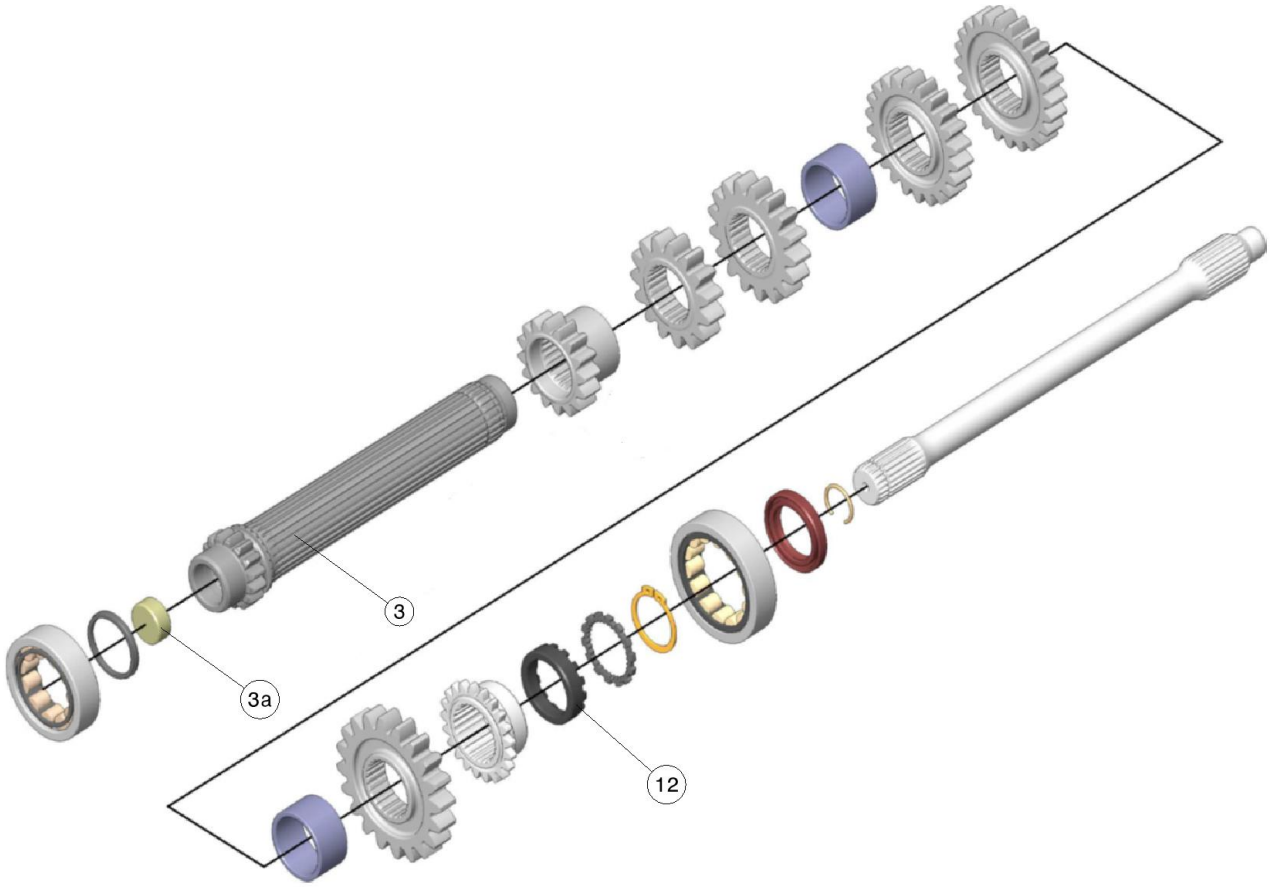

Item	Part number	Description	Glue	Torque (DaN m)
3a	F9047105	Shaft plug	518	
12	F9046206	M35x1.25 nut		18

14.11.2 Mainshaft

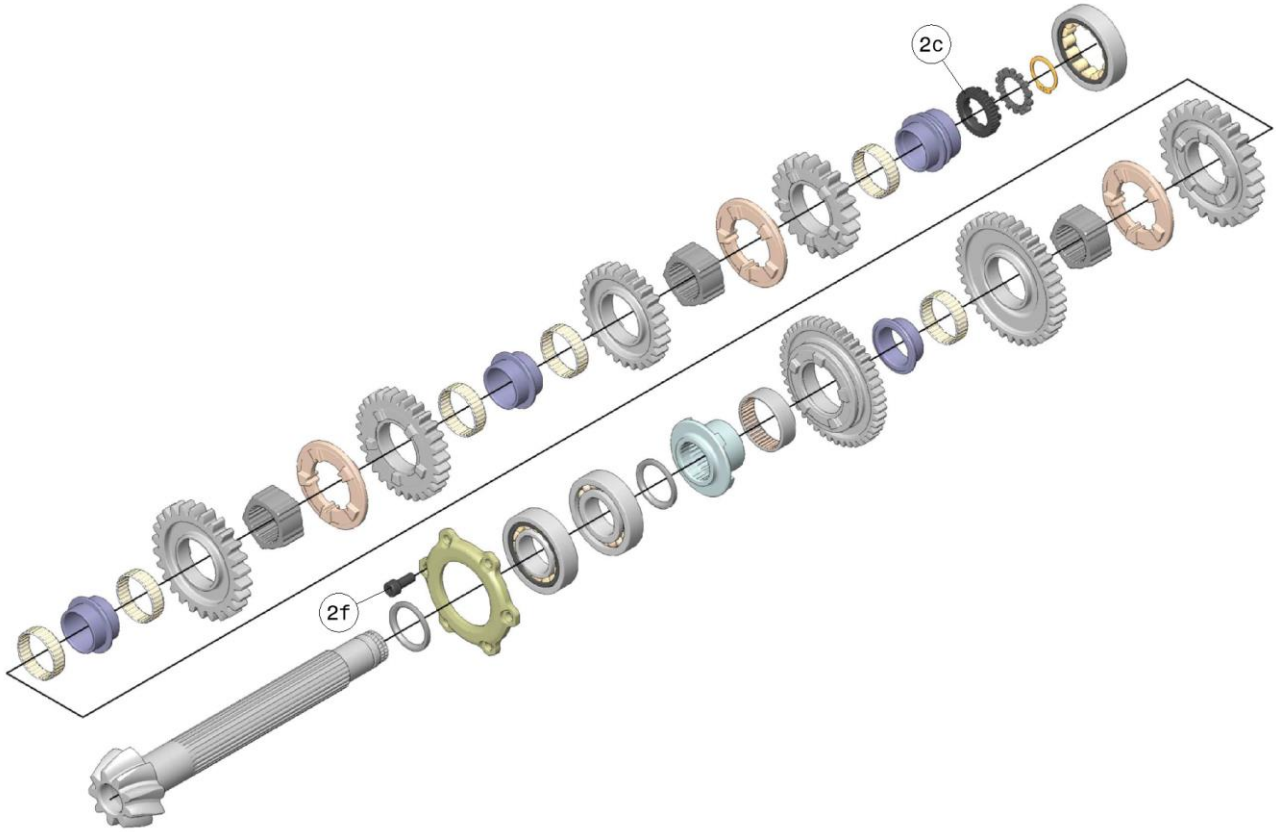

Item	Part number	Description	Glue	Torque (DaN m)
2c	F1910210	Secondary shaft nut		18
2f	0301077	M8x20 Cl.12.9 Chc bolt	270	2.5

14.11.3 Barrel and forks

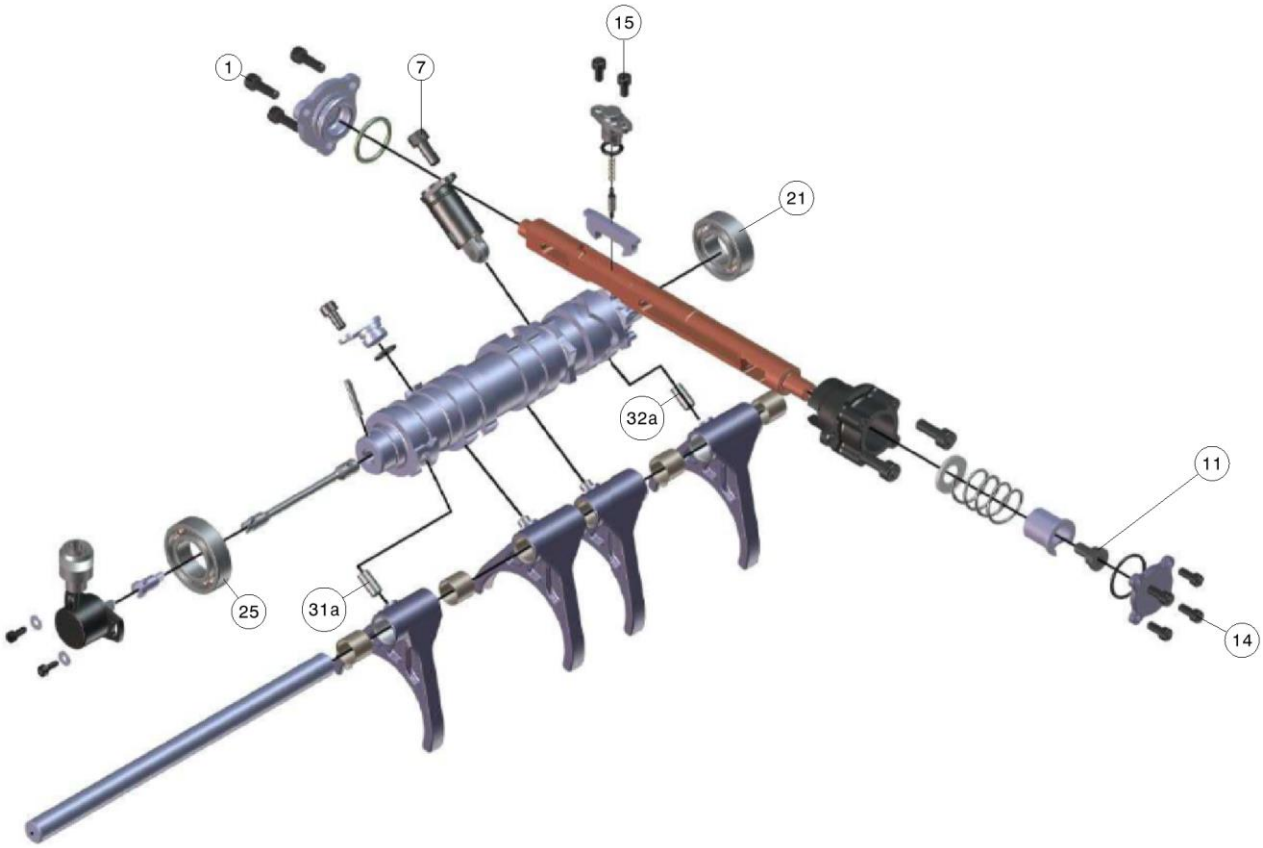

Item	Part number	Description	Glue	Torque (DaN m)
1	0301516	CHC M6x18 cl12.9 bolt	243	1.5
7	0301373	CHc M7x16 cl10.9 ZN bolt	243	2.2
11	F0059021	Selector shouldered bolt	243	2.5
14	0301138	CHc M5x12 cl10.9 ZN bolt	222	0.8
15	0301394	CHc M5x 10 ZN Cl 8.8 bolt	222	0.8
21	0101004	Bearing 6004	518	
25	0101050	Bearing 6005	518	
31a	F0077120	Fork pin	648	
32a	F0077120	Fork pin	648	

14.11.4 Differential

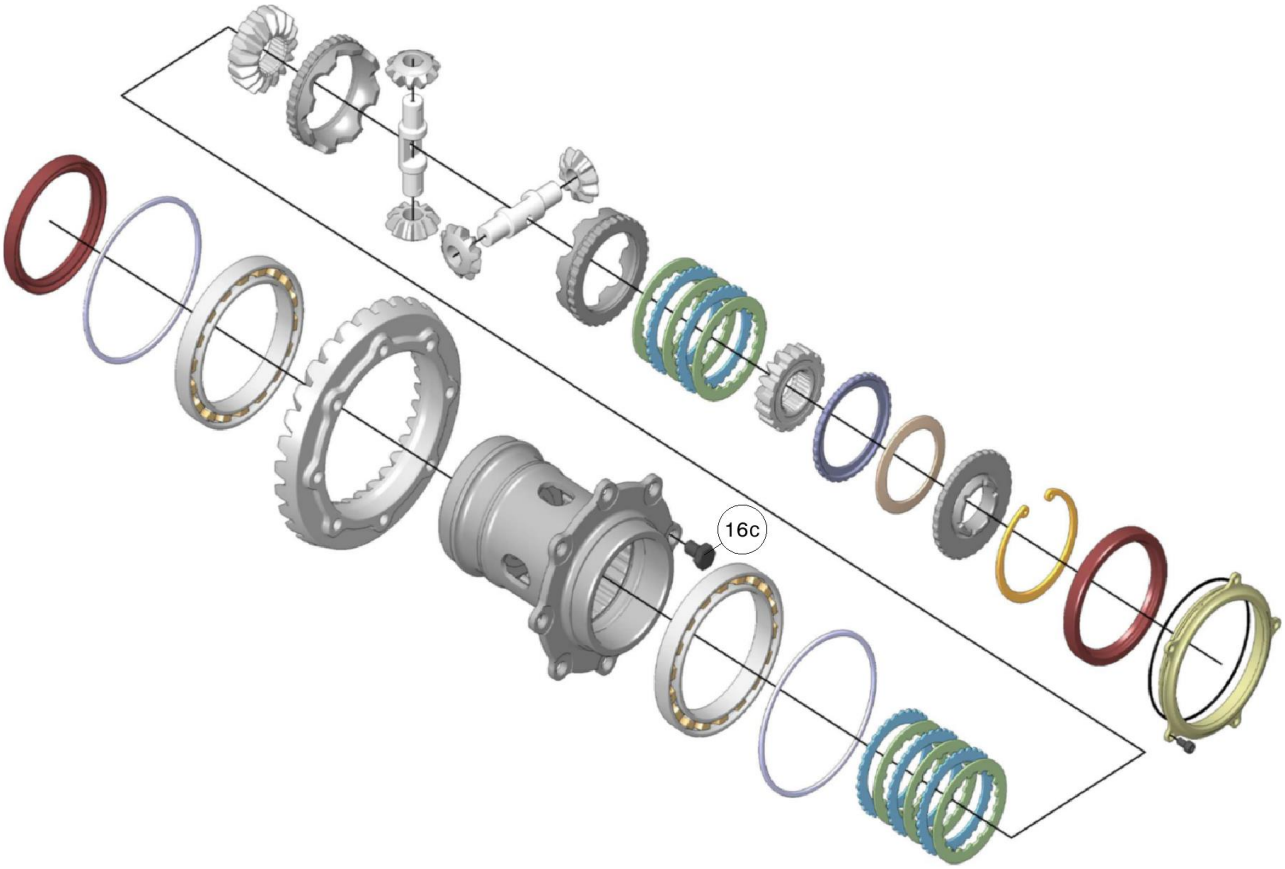

Item	Part number	Description	Glue	Torque (DaN m)
16c	F1910323	M10x100 lg.16 Cl.12.9 H bolt	648	9

14.11.5 Main case

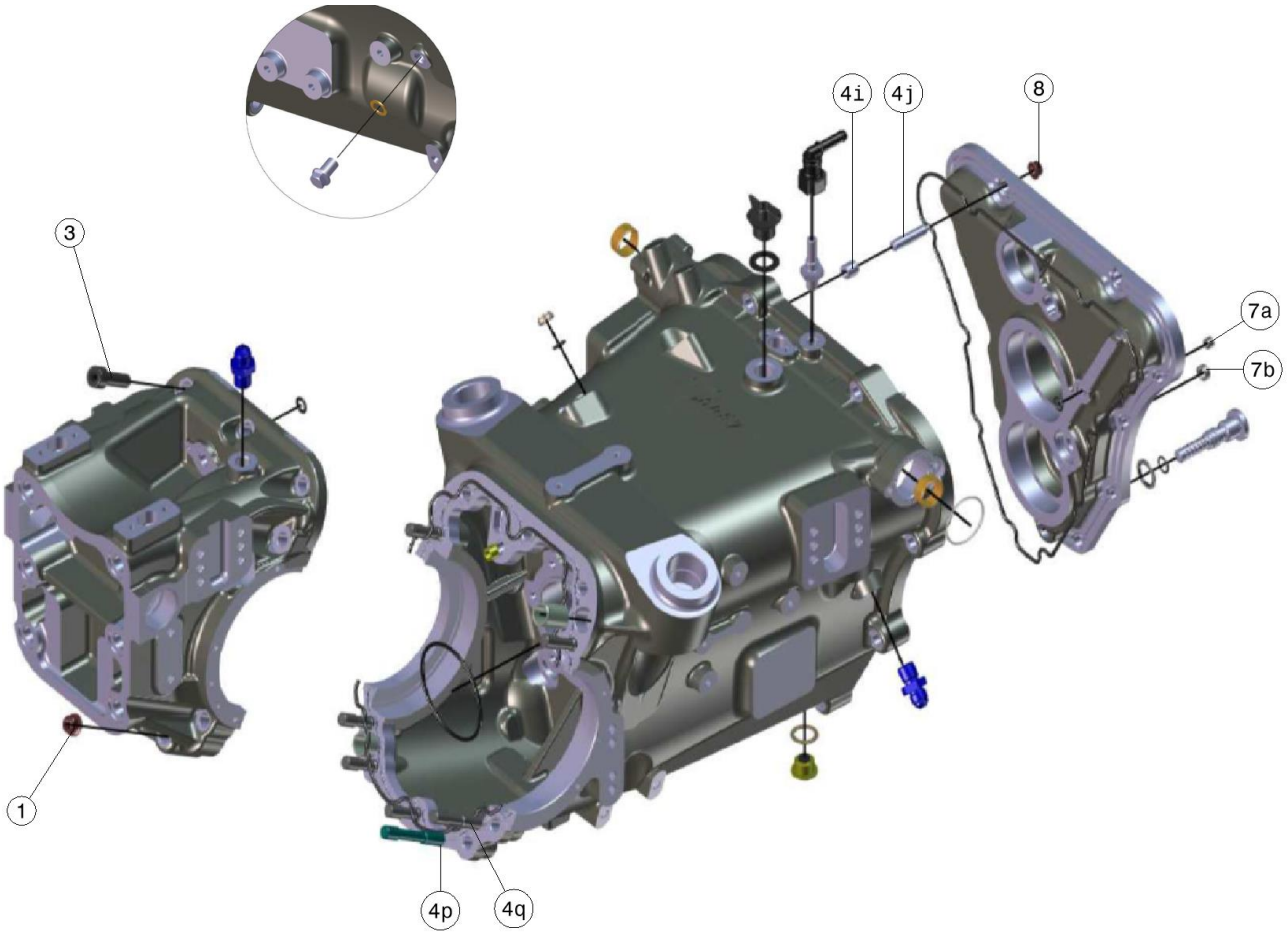

Item	Part number	Description	Glue	Torque (DaN m)
1	0499005	M10x1.25 Simmonds nut		5.5
3	F1910022	Machined M10x30 bolt	243	5.5
3a	0301525	M10x30 CHc bolt	243	5.5
4i	F9001922	Centering pin	648	
4j	F9047008	Gearbox closing plate stud	648	
4p	F9047031	Differential housing stud (long)	648	
4q	F9047030	Differential housing stud (short)	648	
7a	F1404429	Centering pin	648	
7b	1202029	PAP 1005 P11 bushing	648	
8	0499003	M8x1,25 Simmonds nut	243	2.5

14.11.6 Selection and reverse

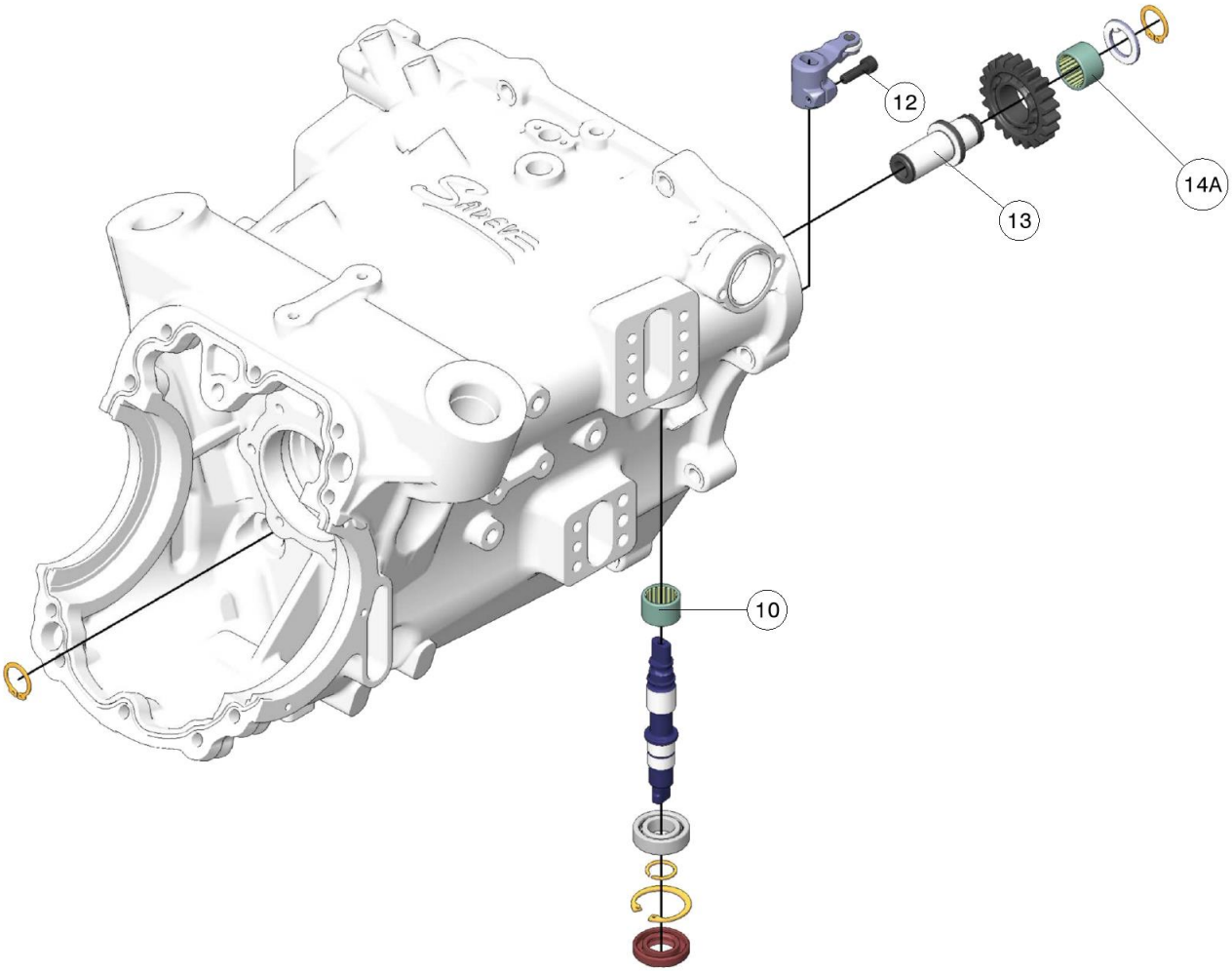

Item	Part number	Description	Glue	Torque (DaN m)
10	0106001	HK1816 bearing	648	
12	0301007	M6x20 cl 10.9 CHc bolt	270	1.6
13	F1910419	Reverse gear axle	12847	
14a	0106021	HK2016 bearing	648	

14.11.7 Oil pump

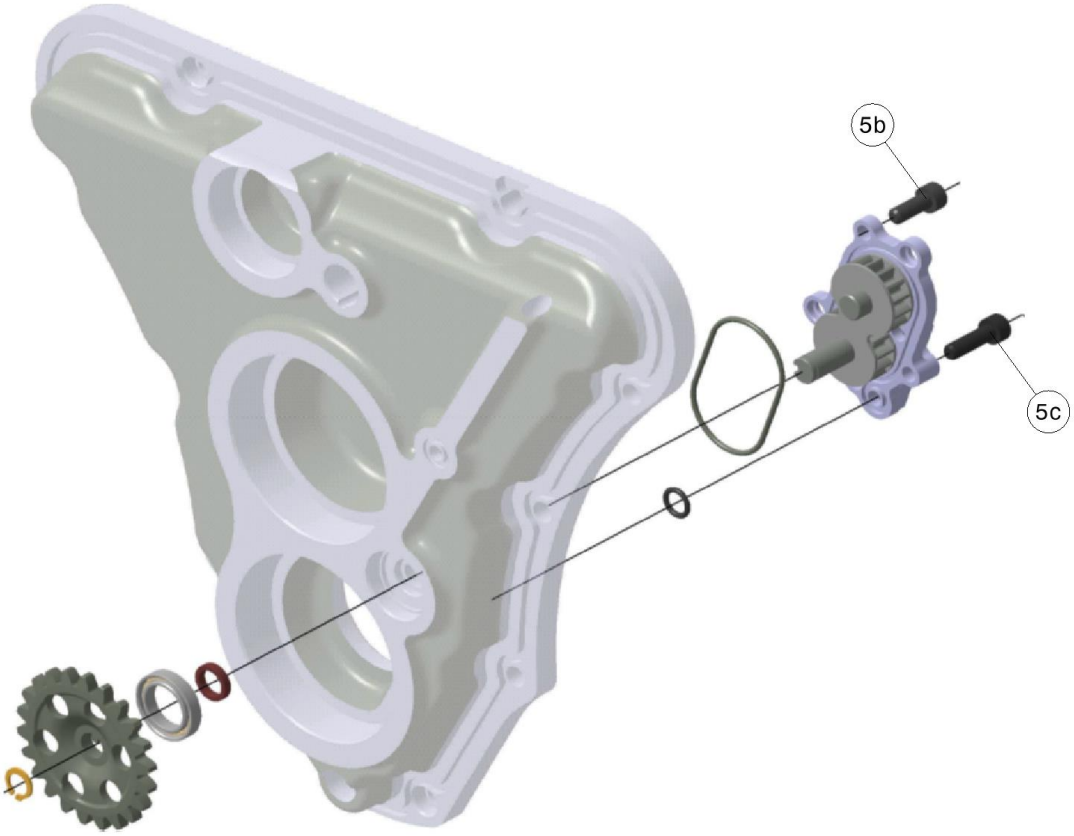

Item	Part number	Description	Glue	Torque (DaN m)
5b	0301422	M6x16 CHc bolt	243	1.5
5c	0301385	M6x20 CHc bolt	243	1.5

14.12 REBUILDING OF THE GEARBOX

14.12.1 Sadev workshop rebuilding.

The gearboxes are delivered sealed and numbered.
The absence of Sadev's seal imposes a careful attitude in the event of minor or major problem to us, and applies to complete reserve of our share if necessary.

Return gear boxes to revision:
At the time of the return of the gearboxes in our buildings, a certain procedure of delivery has to be respected, so that our intervention can be total and practical (casing 'closed' for passage to the bench).

We must receive the complete product as described below:

- Release bearing in place
- Lubrication inlet and outlet closed by appropriate plugs (Goodridge, SpeedFlow…)
- Gear box drained and cleaned
- Drain plug and drain plug seal in place
- Differential in place
- A card specifying the kilometers since the last service

The absence of elements can be specified on the card, but in case of doubt, the material will be sent back re-equipped.

Administrative procedure:

- Send a request for service to SADEV sales department
- Forward the material and its card (description above) in our workshops
- Approve the estimate presented by SADEV sales department
- Approximately 2 to 3 weeks of delivery time must be considered

14.12.2 Private revision

After sale parts for customers who want to proceed a revision by themselves, are delivered only by SADEV sales service.

SADEV IS NOT RESPONSIBLE FOR ANY DAMAGE FOLLOWING A REVISION NOT EXECUTED IN A SADEV AGREED TECHNICAL SERVICE (LIST ON DEMAND).

As every mechanical part which is dedicated for racing, there is not warranty at all from our side.

15 SHIFT SYSTEM

15.1 SYSTEM OVERVIEW

The T318 is equipped with a semi-automatic shift system, here below a quick overview:

- GCU (Gear Control Unit): embedded in the ECU.
- GCC (Gearshift Current Controller): Magneti Marelli SRG-140/GCC, this unit manage the actuator (ESA) control
- ESA (Electric Shift Actuator): Magneti Marelli ESA, this unit driven by the GCC (Magneti Marelli) perform the physical shift, ESA is a position-controlled unit, refer to the chapter 15.1.3 for its setting and maintenance.

15.1.1 Gearshift control

The semi-automatic gearshift is controlled by several parameters of the vehicle, critical sensors are:

- Paddle sensors
- RPM
- Throttle position
- Barrel position
- Clutch pressure sensor
- REV button

Upshift
- 1st to 6th gear: right paddle
- N to 1st gear: Clutch pressure + right paddle
- R to N: Clutch pressure + right paddle

Downshift
- 6th to 1st gear: left paddle (if over-revs threshold is respected)
- 1st to N: simultaneous left + right paddle
- N to R: (car steady) Clutch pressure + REV button

The downshift is allowed only if the lower gear (to be engaged) will not results in an overrevs, if an overrev is expected the shift will be skipped and driver has to repeat the request.

15.1.2 ESA resting position

On Page 6 of the steering wheel display the parameter ***ESAP*** shows the rest position of the gear actuator, the rest position should be within a range of 30mV.

A suggested length for the ESA resting position is shown below:

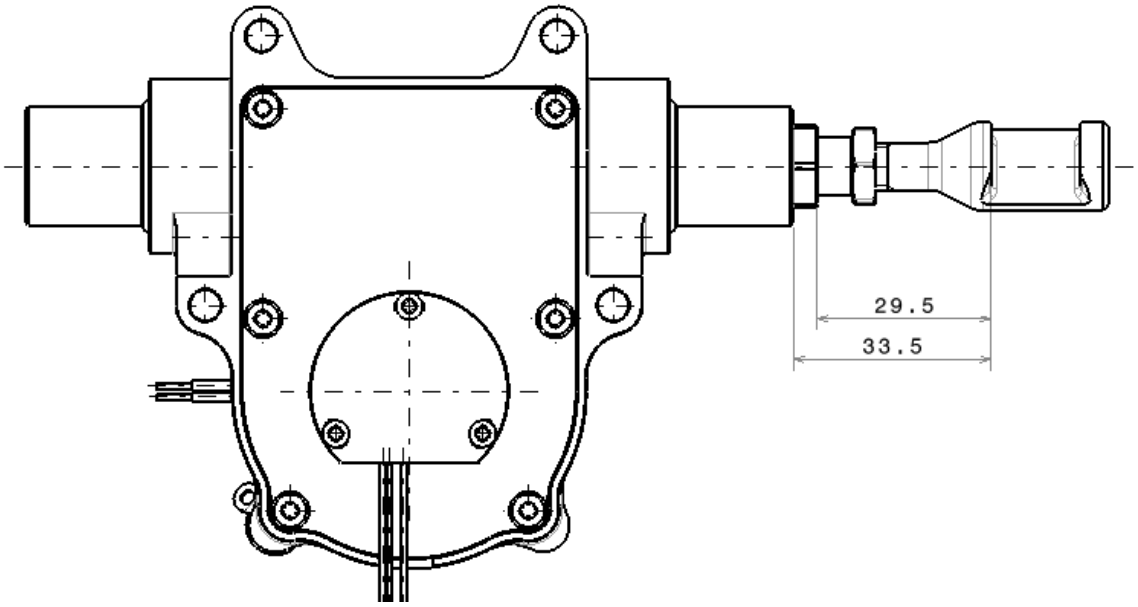

15.1.3 ESA maintenance

It is reminded to check regularly the AV mounting of the ESA:

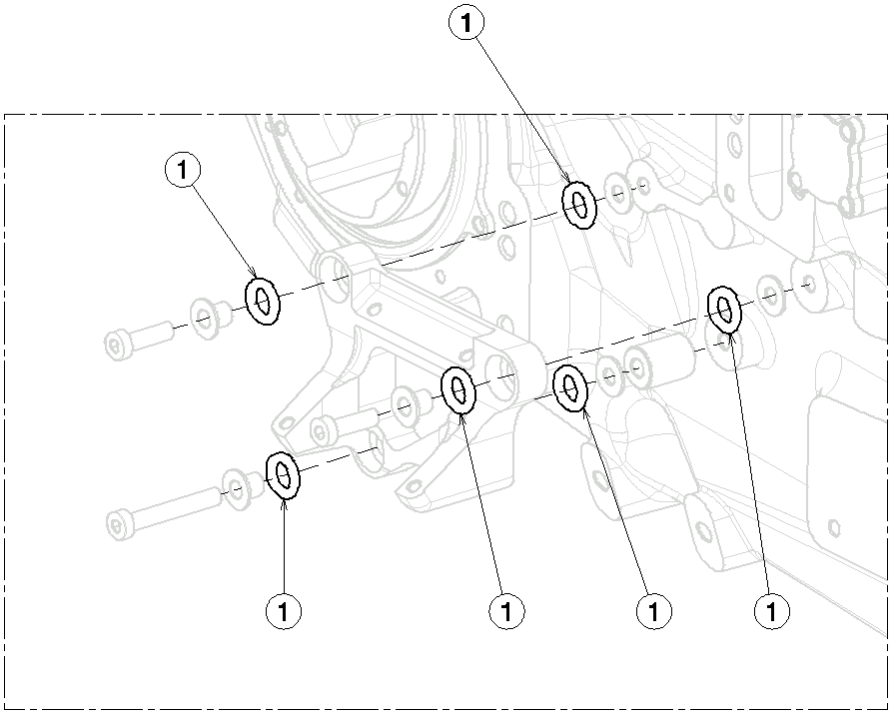

The rubber ring (pn. ORN4036) should be inspected each 1’000 km and must be replaced before 3’000 km.

16 ELECTRONIC & SOFTWARE

16.1 ELECTRONIC

Refer to engine builder docs.

17 ANNEXES

17.1 TIGHTENING TORQUE

		8.8 grade		10.9 grade	
Thread [mm]	**Pitch [mm]**	**Torque [Nm]**	**Torque [Lbs ft]**	**Torque [Nm]**	**Torque [Lbs ft]**
3	0,5	1,2	0,92	1,8	1,3
4	0,7	2,8	2,08	4,0	2,9
5	0,8	5,8	4,26	8,1	6,0
6	1	9,7	7,13	13,6	10,0
8	1,25	23,7	17,45	33,3	24,5
8	1	26,4	19,50	37,2	27,4
10	1,5	47,0	34,70	66,2	48,8
10	1,25	51,4	37,91	72,3	53,3
12	1,75	81,0	59,72	113,9	84,0
12	1,25	93,4	68,90	131,4	96,9
14	2	129,9	95,85	182,7	134,8
14	1,5	146,9	108,34	206,6	152,3
16	2	206,5	152,30	290,4	214,2
16	1,5	229,0	168,90	322,0	237,5

		Grade 5	Grade 8
Thread [Inch]	**Pitch [TPI]**	**Torque [Lbs-ft]**	**Torque [Lbs-ft]**
1/4	28	7	10
5/16	24	14	20
3/8	24	25	35
7/16	20	40	55
1/2	20	60	85
9/16	18	85	120
5/8	18	120	170