ARTICLE 274
2020 FIA FORMULA 4 TECHNICAL REGULATIONS

SUMMARY

ARTICLE 1: DEFINITIONS
1.1 Formula 4 car
1.2 Automobile
1.3 Land vehicle
1.4 Bodywork
1.5 Wheel
1.6 Automobile make
1.7 Event
1.8 Weight
1.9 Racing weight
1.10 Cubic capacity
1.11 Supercharging
1.12 Intake system
1.13 Main structure
1.14 Sprung suspension
1.15 Active suspension
1.16 Cockpit
1.17 Survival cell
1.18 Composite structure
1.19 Telemetry
1.20 Semi-automatic gearbox
1.21 Cockpit padding
1.22 Single supplier parts
1.23 Car centre line
1.24 Engine
1.25 Power Unit
1.26 Energy Recovery System (ERS)
1.27 Motor Generator Unit (MGU)
1.28 Energy Store (ES)
1.29 DC-DC Converter
1.30 Auxiliary circuit
1.31 Traction circuit

ARTICLE 2: REGULATIONS
2.1 Role of the FIA
2.2 Publication date for amendments
2.3 Permanent compliance with the regulations
2.4 Measurements
2.5 Technical passport
2.6 Eligible cars
2.7 Modifications to car design

ARTICLE 3: BODYWORK AND DIMENSIONS
3.1 Wheel centre line
3.2 Height measurements
3.3 Overall width
3.4 Width ahead of the rear wheel centre line
3.5 Width behind the rear wheel centre line

3.6 Overall height
3.7 Front bodywork
3.8 Front wing main plane
3.9 Bodywork in front of the rear wheels
3.10 Bodywork between the rear wheels
3.11 Bodywork behind the rear wheel centre line
3.12 Bodywork around the front wheels
3.13 Bodywork facing the ground
3.14 Skid block
3.15 Overhangs
3.16 Aerodynamic influence
3.17 Wheelbase and track
3.18 Bodywork flexibility
3.19 Power Unit ~~Engine~~ cooling ducts
3.20 Upper bodywork
3.21 Space for the exhaust system
3.22 Space for Power Unit ~~engine~~ and intake system
3.23 Space for radiators

ARTICLE 4: WEIGHT
4.1 Minimum weight
4.2 Ballast
4.3 Adding during the race

ARTICLE 5: POWER UNIT ~~ENGINE~~
5.1 Power Unit ~~Engine~~ homologation
5.2 General Power Unit ~~engine~~ specification
5.3 Main Power Unit ~~engine~~ dimensions
~~5.4 Engine weight~~
5.4 Clutch
5.5 Power Unit ~~Engine~~ Control Unit
5.6 Power Unit ~~Engine~~ rev limiter
5.7 Energy Store (ES)
5.8 Motor Generator Unit (MGU)

ARTICLE 6: PIPING AND FUEL TANKS
6.1 Fuel tanks
6.2 Fittings and piping
6.3 Crushable structure
6.4 Tank fillers
6.5 Refuelling

ARTICLE 7: OIL AND COOLING SYSTEM
7.1 Location of oil tanks
7.2 Longitudinal location of oil system
7.3 Catch tank
7.4 Transverse location of oil system
7.5 Oil replenishment
7.6 Cooling fluids
7.7 Water radiators

ARTICLE 8: ELECTRICAL SYSTEMS
8.1 General electrical safety
8.2 Traction circuit
8.3 Starter
8.4 Starting the engine
8.5 Auxiliary ~~Car~~ battery

8.6 Energy Store (ES)
8.7 Traction circuit wiring
8.8 Accident data recorders
8.9 Data logger, sensors, dashboard and/or steering wheel display
8.10 Electrical system connection interfaces
8.11 Throttle fail safe

ARTICLE 9: TRANSMISSION TO THE WHEELS
9.1 Gearbox and semi-automatic shift system homologation
9.2 Four-wheel drive
9.3 Type of gearbox
9.4 Reverse gear
9.5 Traction control
9.6 Rear suspension pickup points and gearbox mounting points
9.7 Driveshafts
9.8 Semi-automatic shift system
9.9 Shifting aid

ARTICLE 10: SUSPENSION AND STEERING
10.1 General
10.2 Active suspension
10.3 Chromium plating
10.4 Suspension members
10.5 Sprung suspension
10.6 Springs
10.7 Suspension damper
10.8 Suspension uprights
10.9 Wheel bearings
10.10 Steering

ARTICLE 11: BRAKES
11.1 Separate circuits
11.2 Brake discs
11.3 Brake callipers
11.4 Air ducts
11.5 Liquid cooling
11.6 Brake pressure modulation
11.7 Brake pads

ARTICLE 12: WHEELS AND TYRES
12.1 Location
12.2 Wheel material
12.3 Dimensions and weights
12.4 Maximum number of wheels
12.5 Wheel attachment
12.6 Pressure control valves
12.7 Aerodynamic influence

ARTICLE 13: COCKPIT
13.1 Cockpit opening
13.2 Steering wheel
13.3 Internal cross section
13.4 Clutch, brake and throttle pedal

ARTICLE 14: SAFETY EQUIPMENT
14.1 Fire extinguishers
14.2 Master switch

14.3 Rear-view mirrors
14.4 Safety belts
14.5 Rear light
14.6 Headrests and head protection
14.7 Seat, seat fixing and removal
14.8 Head and neck supports
14.9 Towing device

ARTICLE 15: CAR CONSTRUCTION
15.1 Materials used for car construction
15.2 Roll structures
15.3 Survival cell specifications
15.4 Survival cell safety requirements

ARTICLE 16: IMAPCT TESTING
16.1 Frontal test
16.2 Rear test
16.3 Steering column test

ARTICLE 17: ROLL STRUCTURE TESTING
17.1 Principal roll structure test
17.2 Secondary roll structure test

ARTICLE 18: STATIC LOAD TESTING
18.1 Conditions applicable to all static load tests
18.2 Survival cell side tests
18.3 Nose push off test
18.4 Side intrusion test
18.5 Rear impact structure push off test
18.6 Fuel tank floor test
18.7 Cockpit rim test

ARTICLE 19: FUEL
19.1 Fuel
19.2 Air

ARTICLE 20: FINAL TEXT

APPENDIX 1: CHASSIS-RELATED DRAWINGS

APPENDIX 2: POWER UNIT ~~ENGINE~~-RELATED DRAWINGS

APPENDIX 3: ELECTRICAL SYSTEM CONNECTION INTERFACES

APPENDIX 4: APPROVAL OF SAFETY STRUCTURES

ARTICLE 1: DEFINITIONS

1.1 Formula 4 car:

Automobile designed solely for speed races on circuits or closed courses.

1.2 Automobile:

Land vehicle running on at least four non-aligned complete wheels, of which at least two are for steering and at least two for propulsion.

1.3 Land vehicle:

A locomotive device propelled by its own means, moving by constantly taking real support on the earth's surface, and of which the propulsion and steering are under the control of a driver aboard the vehicle.

1.4 Bodywork:

All entirely sprung parts of the car in contact with the external air stream, except the rollover structures and the parts definitely associated with the mechanical functioning of the Power Unit ~~engine~~, transmission and running gear. Airboxes and radiators are considered to be part of the bodywork.

1.5 Wheel:

Flange and rim. Complete wheel: flange, rim and tyre.

1.6 Automobile make:

In the case of Formula racing cars, an automobile make is a complete car. When the car manufacturer fits a Power Unit ~~engine~~ which it does not manufacture, the car shall be considered a hybrid and the name of the Power Unit ~~engine~~ manufacturer shall be associated with that of the car manufacturer. The name of the car manufacturer must always precede that of the Power Unit ~~engine~~ manufacturer.

Should a hybrid car win a Championship Title, Cup or Trophy, this will be awarded to the manufacturer of the car.

1.7 Event:

An event shall consist of official practice and the race.

1.8 Weight:

Is the weight of the car with the driver, wearing his complete racing apparel, at all times during the event.

1.9 Racing weight:

Is the weight of the car in running order with the driver aboard and all fuel tanks full.

1.10 Cubic capacity:

The volume swept in the cylinders of the engine by the movement of the pistons. This volume shall be expressed in cubic centimetres. In calculating engine cubic capacity, the number π shall be 3.1416.

1.11 Supercharging:

Increasing the weight of the charge of the fuel/air mixture in the combustion chamber (over the weight induced by normal atmospheric pressure, ram effect and dynamic effects in the intake and/or exhaust system) by any means whatsoever. The injection of fuel under pressure is not considered to be supercharging.

1.12 Intake system:

All the elements between the cylinder head and the external side of the air restrictor.

1.13 Main structure:

The fully sprung structure of the vehicle to which the suspension and/or spring loads are transmitted, extending longitudinally from the foremost front suspension on the chassis to the rearmost one at the rear.

1.14 Sprung suspension:

The means whereby all complete wheels are suspended from the body/chassis unit by a spring medium.

1.15 Active suspension:

Any system which allows control of any part of the suspension or of the trim height when the car is moving.

1.16 Cockpit:

The volume which accommodates the driver.

1.17 Survival cell:

A continuous closed structure containing all fuel tanks and the cockpit.

1.18 Composite structure:

Non-homogeneous materials which have a cross section comprising either two skins bonded to each side of a core material or an assembly of plies which form one laminate.

1.19 Telemetry:

The transmission of data between a moving car and anyone connected with the entry of that car.

1.20 Semi-automatic gearbox:

One which, when the driver calls for a gear change, takes over the control of one or more of the Power Unit ~~engine~~, clutch and gear selectors momentarily to enable the gear to be engaged.

1.21 Cockpit padding:

Non-structural parts placed within the cockpit for the sole purpose of improving driver comfort and safety. All such material must be quickly removable without the use of tools.

1.22 Single supplier parts:

The following parts must be from a single supplier for all competitors in a championship:

- Power Unit ~~Engine~~ including ECU and mechanical engine installation such as bellhouse, spaceframe, brackets, etc.
- Gearbox including optional paddle shift system
- Suspension dampers
- Rims

1.23 Car centre line:

The straight line running through the point halfway between the centres of the two forward skid block holes and the centre of the rear skid block hole (see Drawing 1.6).

1.24 Engine:

The internal combustion engine including ancillaries and actuator systems necessary for its proper function.

1.25 Power Unit:

The engine, complete with its ancillaries, the energy recovery system and all actuation systems necessary to make them function at all times.

1.26 Energy Recovery System (ERS):

A system that is designed to recover energy from the car, store that energy and make it available to propel the car and, optionally, to drive any ancillaries and actuation systems necessary for its proper function.

1.27 Motor Generator Unit (MGU):

The Motor Generator Unit is the electrical machine mechanically linked to the drive train as part of the ERS.

1.28 Energy Store (ES):

The device storing and releasing the energy used for the ERS.

1.29 DC-DC Converter:

An electronic circuit connected to the Energy Store and whose function is to regulate multi-level voltage outputs for use by the electrical and electronic components of the car and power unit. A DC-DC converter may only consume energy from the energy store and cannot recover energy into the Energy Store. The components directly supplied by the DCDC or indirectly supplied through the non ERS energy storage cannot be used to propel the car or to provide energy to the pressure charging system.

1.30 Auxiliary circuit:

The auxiliary circuit includes the ECU, engine actuators, fuel pump, rain light, radio, camera, logger, GCU, gearshift compressor and/or gear shift actuators that are in the lower voltage side of the DC-DC converter.

1.31 Traction circuit:

The Traction circuit includes the ES, its safety management, the inverter, the MGU and all parts in the higher voltage side of the DC/DC converter.

ARTICLE 2: REGULATIONS

2.1 Role of the FIA:

The following technical regulations for Formula 4 cars are issued by the FIA.

2.2 Publication date for amendments:

Each year in December at the latest, the FIA will publish all changes made to these regulations. All such changes will take effect on the second 1 January following their publication.

Changes made for safety reasons may come into force without notice.

2.3 Permanent compliance with regulations:

Automobiles must comply with these regulations in their entirety at all times during an event.

2.4 Measurements:

All measurements must be made while the car is stationary on a flat horizontal surface.

2.5 Technical passport and FIA chassis test report:

All competitors must be in possession of a technical passport for their car which will be issued by the relevant ASN and must accompany the car at all times.

Furthermore, all competitors must be in possession of an FIA chassis test report (see Appendix 2 to the Formula 4 Technical Regulations) for their car which the relevant rolling chassis manufacturer must provide together with each survival cell.

No car will be permitted to take part in an event unless the passport and the FIA chassis test report are available for inspection at initial scrutineering.

2.6 Eligible cars:

Only cars homologated as FIA Formula 4 cars are eligible in an event.

2.7 Modifications to car design:

2.7.1 General

The complete car is divided into three types of part.

Type 1: These parts must be supplied by the manufacturer and used exactly as supplied. Repairs may be carried out only by the manufacturer.

Type 2: These parts are Type 1 parts with specific restrictions. Only the modifications indicated in the homologation may be carried out. Repairs are allowed only in the range described in the homologation.

Type 3: These parts are unrestricted, provided that they are used as designed by the manufacturer and do not fulfil any additional function.

The above-mentioned parts classification and the user manual form part of the homologation, both documents will be supplied by the respective manufacturer.

The adding of colour or thin adhesive film up to a thickness of 0.5 mm is not considered as a modification, provided that the colour or film fulfils only an optical function.

2.7.2 Standard mounting parts

Standard mounting parts, such as screws, nuts, bolts, washers and lock washers, are considered as Type 3 parts unless specifically mentioned in the homologation. They may be replaced with equivalent or superior standard parts.

The thread type, size, length and pitch must remain the same.

The use of locking wire is permitted.

Any type of standard mounting part which has an influence on the car set-up is considered as a Type 1 part unless specifically mentioned in the homologation.

Only Type 3 washers may be removed.

Washers may be added only for facilitating and improving mechanical installation. They may influence the set-up of the car only when specifically mentioned in the homologation.

2.7.3 Protections

Heat protections, mechanical protections (such as abrasion protection or tape) and protections for driver comfort may be added, provided that their sole function is the protection of the relevant element and unless specifically mentioned in the homologation.

2.7.4 Bodywork

The modification of bodywork parts and bodywork supports is allowed only to ensure proper installation despite manufacturing tolerances.

2.7.5 Quick couplings

The use of quick couplings for brake, clutch and fuel lines is allowed, provided that FIA-approved dry couplings are used.

ARTICLE 3: BODYWORK AND DIMENSIONS

3.1 Wheel centre line:

The centre line of any wheel shall be deemed to be halfway between two straight edges, perpendicular to the surface on which the car is standing, placed against opposite sides of the complete wheel at the centre of the tyre tread.

3.2 Height measurements:

All height measurements will be taken normal to and from the reference plane.

3.3 Overall width:

The overall width of the car including complete wheels shall not exceed 1750 mm, with the steered wheels in the straight ahead position.

3.4 Width ahead of the rear wheel centre line:

The maximum width of the bodywork situated behind a point lying 280 mm behind the front wheel centre line and the rear wheel centre line is 1400 mm.

3.5 Width behind the rear wheel centre line:

3.5.1 Bodywork behind the rear wheel centre line must not exceed 900 mm in width.

3.5.2 Except for attachment, the rear wing end plates must be flat with no holes, apertures or slots.

Screw heads and washers for the sole purpose of attaching the end plates to the wing will be ignored when assessing whether the car is in compliance with Article 3.5.

3.6 Overall height:

No part of the bodywork may be more than 950 mm above the reference plane.

3.7 Front bodywork:

3.7.1 The bodywork situated forward of a point lying 400 mm forward of the front wheel centre line is limited to a maximum width of 1400 mm.

3.7.2 All bodywork situated forward of a point lying 400 mm forward of the front wheel centre line, and more than 200 mm from the centre line of the car, must be no less than 50 mm and no more than 330 mm above the reference plane.

3.7.3 Except for attachment, the front wing endplates must be flat with no holes, apertures or slots and, in order to prevent tyre damage to other cars, at least 10 mm thick within a radius of 5 mm on all edges. The front wing endplates must fit into the volume formed by planes running 690 mm [+ 0 mm/- 1 mm] and 700 mm parallel to the car centre line and normal to the reference plane, 400 mm and 910 mm forward of and parallel to the front wheel centre line and normal to the reference plane and 50 mm and 330 mm above and parallel to the reference plane.

3.7.4 No bodywork is allowed inside a volume formed by: the reference plane; a plane 140 mm above the reference plane; a plane vertical to the reference plane, normal to the car centre line and 400 mm forward of the front wheel centre line; and a plane vertical to the reference plane, normal to the car centre line and 550 mm behind the front wheel centre line.

3.7.5 No bodywork, except for front wing endplates, may extend above a diagonal line from a point 150 mm forward of the front wheel centre line and 560 mm above the reference plane to a point 50 mm rearward of the forwardmost point of the impact-absorbing structure defined by Article 15.3.5 and 250 mm above the reference plane. No bodywork, except for front wing endplates, situated forward of the forwardmost point of this diagonal line may be more than 250 mm above the reference plane.

Screw heads and washers for the sole purpose of attaching the end plates to the wing will be ignored when assessing whether the car is in compliance with Article 3.7.

3.8 Front wing main plane:

3.8.1 The aerofoil section of the front wing must conform to the sets of dimensions given in Drawing 1.3. Each of the dimensions given must remain nominally at the same height above the reference plane over the entire width.

A tolerance of ± 1.0 mm will be permitted on any stated dimension.

3.8.2 The front wing end plates must be orientated vertical to the reference plane, parallel to the car centre line and directly attached to the homologated front wing main plane (meaning no other parts are allowed between the homologated front wing main plane and the front wing end plate).

3.8.3 With the exception of the front wing end plates and the attachment points (inserts/holes) for the homologated front wing hangers (including spacers or shims between the hangers and the main plane), the front wing main plane must be a single, smooth, rigid, continuous element without any slots, gaps, attachments or dividers in order that only one single continuous section may be contained within any cross section taken parallel to the car centre line and normal to the reference plane.

3.8.4 On either side of the car, within 15 mm from the trailing edge of the front wing main plane, one L-shaped gurney flap with a height of maximum 15 mm may be attached (above and below). For this purpose, homologated inserts/holes are permitted in this area.

3.8.5 No bodywork is allowed inside a volume formed by the reference plane, two longitudinal planes which run normal to the reference plane and 300 mm parallel to the car centre line either side and two planes which run normal to the reference plane and parallel to and 450 mm and 1010 mm forward of the front wheel centre line, except for the following components:

a) homologated frontal impact-absorbing structure;

b) homologated front wing hangers;

c) homologated front wing hanger covers;

d) homologated front wing main plane (as per homologation drawing).

3.8.6 Spacers or shims between the front wing hangers and the front wing main plane or the frontal impact-absorbing structure are allowed for the sole purpose of bringing the front wing main plane to its legal position.

3.9 Bodywork in front of the rear wheels:

3.9.1 With the exception of rear-view mirrors (including their supports), no part of the bodywork lying 280 mm forward of the rear wheel centre line and more than 550 mm above the reference plane may project more than 310 mm each side of the car centre line.

Formula 4 cars homologated as from 01.01.2019:

With the exception of rear-view mirrors (including their supports), no part of the bodywork lying 280 mm forward of the rear wheel centre line and more than 550 mm above the reference plane may project more than 350 mm each side of the car centre line.

3.9.2 No bodywork forward of the rear wheel centre is allowed above a plane normal to the centre line, which is defined by the following two points:

- a point 900 mm forward of the rear wheel centre line and 950 mm above the reference plane;

- a point above the rear wheel centre and 550 mm from the reference plane.

3.9.3 Any vertical cross section of bodywork normal to the car centre line situated in the volumes defined below must form one tangent continuous curve on its external surface. This tangent continuous curve may not contain any radius less than 75 mm:

a) the volume between 50 mm forward of the rear wheel centre line and 300 mm rearward of the rear face of the cockpit entry template, which is more than 25 mm from the car centre line and more than 600 mm above the reference plane;

b) the volume between 300 mm rearward of the rear face of the cockpit entry template and 75 mm rearward of the rear face of the cockpit entry template, which is more than 125 mm from the car centre line and more than 600 mm above the reference plane;

c) the volume between 300 mm rearward of the rear face of the cockpit entry template and 900 mm reward of the front wheel centre line, which is more than 380 mm from the car centre line and more than 100 mm above the reference plane.

d) The volume between the rear face of the cockpit entry template and 450 mm forward of the rear face of the cockpit entry template, which is more than 125 mm from the car centre line and more than 675mm above the reference plane.

e) The volume between 50 mm forward of the rear wheel centre line and 300 mm rearward of the rear face of the cockpit entry template, which is more than 350 mm from the car centre line and more than 100 mm above the reference plane.

The surfaces lying within this volume, which are situated more than 55 mm forward of the rear wheel centre line, must not contain any apertures (other than those permitted by Article 3.9.4) or contain any vertical surfaces which lie normal to the car centre line.

Formula 4 cars homologated as from 01.01.2019:

b) the volume between 300 mm rearward of the rear face of the cockpit entry template and 150 mm rearward of the rear face of the cockpit entry template, which is more than 125 mm from the car centre line and more than 600 mm above the reference plane;

d) The volume between the rear face of the cockpit entry template and 450 mm forward of the rear face of the cockpit entry template, which is more than 125 mm from the car centre line and more than 695 mm above the reference plane.

3.9.4 Once the relevant bodywork surfaces are defined in accordance with Article 3.9, apertures may be added for the following purposes only:

a) a single aperture either side of the car centre line for the purpose of the exhaust exit. The bodywork edge of this aperture may have a maximum distance of 10 mm to any point lying on the circumference of the exhaust pipe;

b) rectangular apertures either side of the car centre line for the purpose of allowing suspension members and driveshafts to protrude through the bodywork. No such aperture may have an area greater than 5000 mm² when projected onto the surface itself. No point of such an aperture may be more than 100 mm from any other point on the aperture.

c) two apertures on each side of the car centre line for the purpose of the sidepod air exit. The apertures must be symmetrical around the car centre line and may be no more than 300 mm forward of the rear wheel centre line. No bodywork which is more than 100 mm above the reference plane may lie behind the aperture and forward of the rear wheel centre line.

3.9.5 No bodywork which is more than 100 mm above the reference plane and more than 310 mm from the car centre line is allowed between the rear wheel centre line and 240 mm forward of the rear wheel centre line.
Only devices for the sole purpose of connecting the floor to the chassis are permitted within this volume.

3.10 Bodywork between the rear wheels:

In plan view, no bodywork which is more than 550 mm above the reference plane is permitted outside a line defined by the following two points:

- one point lying 280 mm forward of the rear wheel centre line and 230 mm from the car centre line;
- one point lying on the rear wheel centre line and 200 mm from the car centre line.

3.11 Bodywork behind the rear wheel centre line:

3.11.1 No bodywork behind a point lying 250 mm behind the rear wheel centre line may incorporate more than two aerofoil sections. The upper aerofoil sections used in this area must conform to the set of dimensions given in Appendix 1 Drawing 4. The lower aerofoil sections used in this area must conform to the set of dimensions given in Appendix 1 Drawing 5. Each of the dimensions given must remain nominally at the same height above the reference plane over the entire width of the relevant aerofoil section.

No holes, apertures or slots are permitted in any of these aerofoil sections.

No trim tabs may be added to any of these aerofoil sections.

A tolerance of $\pm$ 1.0 mm will be permitted on any stated dimension.

Only the mandatory aerofoil sections may be attached to the rear wing end plates.

3.11.2 No bodywork which is more than 550 mm above the reference plane is allowed between the rear wheel centre and 250 mm behind the rear wheel centre line.

3.11.3 All bodywork situated behind the rear wheel centre line must be no more than 860 mm and no less than 310 mm above the reference plane.

No bodywork which is more than 310 mm above the reference plane and between the rear wheel centre line and 250 mm behind the rear wheel centre line may be more than 200 mm from the car centre line.

The above mentioned restrictions will be applied except for the following components:

a) homologated rear impact-absorbing structure;

b) homologated rear wing support;

c) homologated gearbox casing;

d) homologated rear light;

e) homologated jacking points attached to the rear impact-absorbing structure.

3.12 Bodywork around the front wheels:

3.12.1 In plan view, there must be no bodywork in the area formed by two longitudinal lines parallel to and 220 mm and 875 mm from the car centre line and two transversal lines, one 400 mm forward and one 280 mm behind the front wheel centre line.

In plan view, no bodywork is permitted within an area defined by a line normal to the car centre line and 280 mm behind the front wheel centre line, a line normal to the car centre line and 850 mm behind the front wheel centre line, a line 875 mm parallel to the car centre line and a line running through a point 220 mm from the car centre line and 280 mm behind the front wheel centre line and a point 310 mm from the car centre line and 850 mm behind the front wheel centre line.

This does not apply to any parts of the rear-view mirrors (including their supports), which are visible in the described area, provided each of these areas does not exceed 9000 mm² when projected to a plane above the car which is parallel to the reference plane. The rear-view mirror supports must have a circular cross section.

3.12.2 Except for the rollover structures and the windscreen, no bodywork forward of a point lying 850 mm forward of the rear face of the cockpit entry template is allowed above a plane normal to the centre line, which is defined by the following two points:

- a point 150 mm forward of the front wheel centre line and 560 mm above the reference plane;

- a point 850 mm forward of the rear face of the cockpit entry template and 580 mm above the reference plane.

Formula 4 cars homologated as from 01.01.2019:

Except for the rollover structures and the windscreen, no bodywork forward of a point lying 850 mm forward of the rear face of the cockpit entry template is allowed above two planes normal to the centre line, which are defined by the following points:

- a plane through a point 150 mm forward of the front wheel centre line and 560 mm above the reference plane and a point on the front wheel centre line and 600 mm above the reference plane;

- a plane through a point on the front wheel centre line and 600 mm above the reference plane and a point 875 mm forward of the rear face of the cockpit entry template and 625 mm above the reference plane.

3.12.3 Except for the rollover structures, the cockpit rim edge, the inside of the cockpit, the windscreen and the attachment of the frontal impact-absorbing structure, any intersection of any bodywork above the reference plane and 400 mm forward of and 900 mm behind the front wheel centre line which is visible from above or beneath the car with a lateral or longitudinal vertical plane should form one continuous line, with a minimum radius of 10 mm for bodywork more than 60 mm and 1 mm for bodywork less than 60 mm above the reference plane and which is visible from above and beneath the car respectively.

3.12.4 Except for the rollover structures, the cockpit rim edge, the inside of the cockpit, the windscreen and the attachment of the frontal impact-absorbing structure, any vertical cross section normal or parallel to the car centre line of any bodywork visible from above, lying more than 900 mm forward of the rear face of the cockpit entry template and less than 330 mm forward of the front wheel centre line, which is less than 220 mm from the car centre line, should form one continuous line with a minimum radius of 25 mm for normal and 50 mm for parallel cross sections.

3.12.5 Except the front wing defined by Article 3.8 and the attachment of the frontal impact-absorbing structure, any vertical cross section normal or parallel to the car centre line of any bodywork visible from above, lying more than 330 mm forward of the front wheel centre line and more than 50 mm behind the forwardmost point, which is less than 220 mm from the car centre line, may only have a continuous, convex shape with a minimum radius of 25 mm for normal and 50 mm for parallel cross sections.

3.13 Bodywork facing the ground:

All sprung parts of the car situated more than 550 mm behind the front wheel centre line and forward of the rear wheel centre line, and which are visible from underneath, must form surfaces which lie on one of two parallel planes, the reference plane or the step plane. This does not apply to any parts of rear-view mirrors which are visible, provided each of these areas does not exceed 9000 mm² when projected to a horizontal plane above the car. The step plane must be 50 mm above the reference plane.

Additionally, the surface formed by all parts lying on the reference plane must:

a) extend from a point lying 550 mm behind the front wheel centre line to a point lying 280 mm forward of the rear wheel centre line;

b) have minimum and maximum widths of 300 mm and 500 mm respectively;

c) be symmetrical about the car centre line;

d) be made of wood at least 10 mm thick.
For the sole purpose of incorporating a production flywheel, a cut-out, symmetrical to the car centre line with a maximum width of 180 mm, maximum length of 120 mm and a maximum depth of 5 mm, may be added on the upper side.

All parts lying on the reference and step planes, in addition to the transition between the two planes, must produce uniform, solid, hard, continuous, rigid (no degree of freedom in relation to the body/chassis unit), impervious surfaces under all circumstances.

The peripheries of the surfaces formed by the parts lying on the reference and step planes may be curved upwards with maximum radii of 25 and 50 mm respectively. The surface formed by the parts lying on the reference plane must be connected at its extremities vertically to the parts lying on the step plane and any corner which forms the transition between the two planes may have a maximum radius of 25 mm.

To help overcome any possible manufacturing problems, and not to permit any design which may contravene any part of these regulations, dimensional tolerances are permitted on bodywork situated more than 550mm behind the front wheel centre line and forward of the rear wheel centre line.

A vertical tolerance of +/- 5 mm is permissible across the surfaces lying on the reference and step planes and a horizontal tolerance of 5 mm is permitted when assessing whether a surface is visible from beneath the car.

All sprung parts of the car situated behind a point lying 280 mm forward of the rear wheel centre line, which are visible from underneath and more than 150 mm from the car centre line**,** must be at least 50 mm above the reference plane.

In an area lying 700 mm or less from the car centre line, and from 450 mm forward of the rear face of the cockpit entry template to the rear wheel centre line, any intersection of any bodywork visible from beneath the car with a lateral or longitudinal vertical plane should form one continuous line which is visible from beneath the car.

Compliance with Article 3.13 must be demonstrated with all unsprung parts of the car removed.

3.14 Skid block:

3.14.1 Beneath the surface formed by all parts lying on the reference plane, a rectangular skid block must be fitted. This skid block may comprise more than one piece but must:

a) extend longitudinally from a point lying 550 mm behind the front wheel centre line to a point lying 280 mm forward of the rear wheel centre line;

b) be made from wood;

c) have a width of 300 mm with a tolerance of $\pm$ 2 mm;

d) Have a minimum thickness of 2.0 mm.

e) have a uniform thickness of at least 4.8 mm when new;

f) have no holes or cut-outs other than those necessary to fit the skid block to the car;

g) have three precisely placed 80 mm diameter holes the positions of which are detailed in Drawing 1.6;

h) be fixed symmetrically about the centre line of the car in such a way that no air may pass between it and the surface formed by the parts lying on the reference plane.

3.14.2 The front and rear edge of a new skid block may be chamfered over a distance of 50 mm to a depth of 3 mm.

3.14.3 In order to establish the conformity of the skid block after use, its thickness will be measured only around the three 80 mm diameter holes; the minimum thickness must be respected in at least one place on the circumference of all three holes.

3.15 Overhangs:

With the exception of the structure required by Article 15.4.2 and the FIA-approved rear light and any jacking point attached to this structure, no part of the car shall be more than 500 mm behind the rear wheel centre line or more than 1010 mm in front of the front wheel centre line.

No part of the bodywork more than 200 mm from the longitudinal car centre line may be more than 910 mm in front of the front wheel centre line.

3.16 Aerodynamic influence:

Any specific part of the car influencing its aerodynamic performance (with the exception of non-structural shrouds protecting wheel tethers which are being used solely for this purpose):

a) must comply with the rules relating to bodywork;

b) must be rigidly secured to the entirely sprung part of the car (rigidly secured means not having any degree of freedom);

c) must remain immobile in relation to the sprung part of the car.

Any device or construction that is designed to bridge the gap between the sprung part of the car and the ground is prohibited under all circumstances.

No part having an aerodynamic influence and no part of the bodywork, with the exception of the skid block in Article 3.14 above, may under any circumstances be located below the reference plane.

3.17 Wheelbase and track:

Wheelbase: 2750 mm $\pm$ 10 mm

Minimum track: 1200 mm.

3.18 Bodywork flexibility:

3.18.1 Bodywork may deflect no more than 5 mm vertically when a 50 kg load is applied vertically to it 700 mm forward of the front wheel centre line and 575 mm from the car centre line, this point being the centre of the adapter described below. The load will be simultaneously applied on both sides of the front wing main plane in a downward direction using a rectangular adapter 300 mm long and 150 mm wide with the 300 mm edges running parallel to the car centre line. The adapter must follow the shape of the front wing in the area defined above and the teams must supply the latter when such a test is deemed necessary. During the test the car must sit on the skid block and the deflection is measured on both sides of the front wing main plane and at the car centre line, the car centre line figure being deducted from the LHS and RHS figures.

3.18.2 In order to ensure that the requirements of Article 3.18 are respected, the FIA reserves the right to introduce further load/deflection tests on any part of the bodywork that appears to be (or is suspected of) moving while the car is in motion.

3.19 Power Unit ~~Engine~~ cooling ducts:

The Power Unit ~~engine~~ cooling duct surface must be at least 75,000 mm² in total. This is measured to a projection onto a plane vertical to the reference plane and normal to the car centre line and must be maintained up to the radiator surface. Further, any intersection taken normal to the car centre line and vertical to the reference plane must form a continuous line up to the radiator.

Devices for the sole purpose of connecting the floor to the chassis and to protect the radiators are allowed within the radiator duct and may pass through the bodywork. The devices and passages through the bodywork must have a circular cross section with a diameter no greater than 5 mm and 7 mm respectively or a rectangular cross section of 25 mm x 2 mm and 30 mm x 5 mm respectively.

3.20 Upper bodywork:

3.20.1 When viewed from the side, the car must have bodywork in the area bounded by four lines: one vertical 30 mm behind the rear face of the cockpit entry template, one horizontal 550 mm above the reference plane, one horizontal 860 mm above the reference plane, and one diagonal which intersects the 860 mm horizontal at a point 850 mm forward of the rear wheel centre line and the 550 mm horizontal at a point lying 50 mm forward of the rear wheel centre line.

With exception of the local extensions mentioned in Article 3.22, any bodywork within this area must be arranged symmetrically about the car centre line and, when measured 200 mm vertically below the diagonal boundary line, must have minimum widths of 150 mm and 50 mm respectively at points lying 850 mm and 50 mm forward of the rear wheel centre line. This bodywork must lie on or outside the boundary defined by a linear taper between these minimum widths.

3.20.2 In order that a car may be lifted quickly in the event of it stopping on the circuit, the principal rollover structure and the engine cover must incorporate an unobstructed opening designed to permit a strap, whose section measures 60mm x 30mm, to pass through it.

3.21 Space for exhaust system:

The sidepods must be designed such that an exhaust system including a cylindrical muffler with a diameter of 150 mm and a length of 600 mm may be fitted on either side of the car.

The last 50 mm of the tailpipe must have a cylindrical shape with a circular cross section. The major axis of the cylinder may have an angle between 0 and 15 degrees to the car centre line (the exhaust exit facing away from the car centre line) and may have an angle between 0 and 90 degrees to the reference plane (the exhaust exit facing upwards and rewards). The centre of the circular cross section at the end of the tailpipe must have a minimum height of 280 mm above the reference plane.

No bodywork may be within a cone at 45° and measuring 200 mm in length, which is concentric to the major axis of the tailpipe and facing towards the exhaust flow direction.

All exhaust gas must pass through this tailpipe.

3.22 Space for Power Unit ~~engine~~ and intake system:

The car must be designed such that a Power Unit ~~engine~~ and intake system with the maximum dimensions given in Article 5.3 may be fitted. If necessary for the installation of the Power Unit ~~engine~~, it must be possible to add local extensions to the defined bodywork.

3.23 Space for radiators:

The car must be designed such that a radiator with the following dimensions may be fitted on either side of the car:

- minimum height: 400 mm

- minimum width: 600 mm

- minimum thickness: 30 mm

The above-mentioned dimensions include pipes and connections.

The shorter edge of the rectangular cooling surface must be positioned normal to the reference plane.

In plan view, the longer edge of the rectangular cooling surface must have a minimum angle of 30° to the car centre line.

ARTICLE 4: WEIGHT

4.1 Minimum weight:

The weight of the car must not be less than 570 kg.

Adjustments to the minimum weight may be specified within the sporting regulations of each championship to compensate different Power Unit ~~engine~~ weights. However, the power to weight ratio (without driver) may not be less than 3 kg/HP.

4.2 Ballast:

Ballast can be used provided it is secured in such a way that tools are required for its removal. It must be possible to fix seals if deemed necessary by the scrutineers.

4.3 Adding during the race:

The adding to the car during the race of any liquid or other material whatsoever or the replacement during the race of any part with another that is materially heavier is forbidden.

ARTICLE 5: POWER UNIT ~~ENGINE~~

5.1 Power Unit ~~Engine~~ homologation:

Only Power Units ~~engines~~ which have been homologated in accordance with the Formula 4 Homologation Regulations may be used during an event.

All such Power Units ~~engines~~ should be delivered in such a condition that the seals can be fitted.

5.2 General engine specification:

5.2.1 Only 4-stroke (Otto principle) engines with reciprocating pistons are permitted.

5.2.2 Turbocharged engines are permitted.

5.2.3 The engine may be structural or be fitted with an additional space frame.

5.3 Main Power Unit ~~engine~~ and intake system dimensions:

5.3.1 The height of the crankshaft rotational axis must be at 160 mm ± 1 mm above the reference plane.

5.3.2 The length between front and rear mounting flanges (Power Unit ~~engine~~ including bellhousing and/or spaceframe) must be 700 mm ± 0.5 mm.

5.3.3 The Power Unit ~~engine~~ -to-chassis mounting points must be arranged in accordance with Drawing 2.1.

5.3.4 The bell housing or space frame-to-gearbox mounting surface must be arranged in accordance with Drawing 1.9d.

5.3.5 The Power Unit ~~engine~~ including bell housing or space frame and intake system but excluding the ES, must comply with the maximum dimensions given in Drawing 2.2. If necessary for the installation of the Power Unit ~~engine~~, local extensions may be added.

5.3.6 The air intake must be situated on top of the engine, behind or inside the principal roll structure.

5.3.7 All air feeding the engine must pass through the main rollover structure of the car.

5.3.8 The bellhouse or space frame must provide the forward pickup points of the lower rear wishbone in accordance with Drawings 1.9a and 1.9e.

~~**5.4 Engine weight:**~~

~~The maximum weight of all parts listed in Article 3.6 of the FIA Formula 4 Homologation Regulations is 138kg.~~

5.4 Clutch:

The clutch should be designed such that the lifetime of all parts exceeds 10,000 km**.**

5.5 Power Unit ~~Engine~~ Control Unit:

5.5.1 The ECU must provide the common connector defined by Article 8.6.

5.5.2 The Power Unit ~~engine~~ manufacturer must provide a mechanism that allows the scrutineers to accurately identify the ECU software version loaded.

5.5.3 The following channels must be available via CAN for the chassis data logging system:

- Throttle pedal position only in case of a drive-by-wire system
- Engine rpm
- Battery voltage
- Water temperature
- Oil temperature
- Oil pressure.

5.5.4 The following channels, when they exist, must be available for Power Unit ~~engine~~ support and scrutineering purposes only:

- Ignition cut
- Ignition timing
- Injection timing
- Fuel mass
- Global fuel mass correction factor
- Lambda
- Air temperature
- Airbox/inlet pressure
- Throttle valve position

5.6 Engine rev limiter

Any rev limiter other than for over-rev protection or any function or construction, designed to help the driver finding a predefined rev level for starting, is forbidden.

5.7 Energy Store (ES)

Liquid cooling is forbidden.

5.8 Motor Generator Unit (MGU)

The MGU must be mechanically linked to the engine before the main clutch.

ARTICLE 6: PIPING AND FUEL TANKS

6.1 Fuel tanks:

6.1.1 The fuel tank must be a single rubber bladder conforming to or exceeding the specifications of FIA Standard FT3-1999, ~~FIA/FT3 or FT3-1999,~~ the fitting of foam within the tank however is not mandatory. A list of approved materials may be found in FIA Technical List No.1 (List of fuel bladders homologated according to the FIA Standards FT3-1999, FT3.5-1999, FT5-1999) on the FIA website.

6.1.2 All the fuel stored on board the car must be situated between the front face of the Power Unit ~~engine~~ and the driver's back when viewed in lateral projection.

Furthermore, no fuel can be stored more than 300 mm forward of the highest point at which the driver's back makes contact with his seat.

However, a maximum of 2 litres of fuel may be kept outside the survival cell, but only the quantity which is necessary for the normal running of the engine.

6.1.3 Fuel must not be stored more than 400 mm from the car's longitudinal centre line.

~~**6.1.4** All rubber bladders must be made by manufacturers recognised by the FIA. In order to obtain the agreement of the FIA, the manufacturer must prove the compliance of his product with the specifications approved by the FIA. These manufacturers must undertake to deliver to their customers exclusively tanks complying with the approved standards. A list of approved manufacturers is available from the FIA.~~

~~**6.1.5** All rubber bladders shall be printed with the name of the manufacturer, the specifications to which the tank has been manufactured and the date of manufacture.~~

6.1.4 No rubber bladders shall be used more than 5 years after the date of manufacture, unless inspected and recertified by the manufacturer for a period of up to another 2 years.

6.2 Fittings and piping:

6.2.1 All apertures in the fuel tank must be closed by hatches or fittings which are secured to metallic or composite bolt rings bonded to the inside of the bladder.

The bolt hole edges must be no less than 5 mm from the edge of the bolt ring, hatch or fitting.

All hatches and fittings must be sealed with the gaskets or "O" rings supplied with the tank.

6.2.2 All fuel lines between the fuel tank and the engine must have a self-sealing breakaway valve. This valve must separate at less than 50% of the load required to break the fuel line fitting or to pull it out of the fuel tank.

6.2.3 No lines containing fuel, cooling water or lubricating oil may pass through the cockpit.

6.2.4 All lines must be fitted in such a way that any leakage cannot result in the accumulation of fluid in the cockpit.

6.2.5 No hydraulic fluid lines may have removable connectors inside the cockpit.

6.2.6 When flexible, all lines must have threaded connectors and an outer braid which is resistant to abrasion and flame.

6.2.7 All fuel and lubricating oil lines must have a minimum burst pressure of 41 bar at the maximum operating temperature of 135°C.

6.2.8 All hydraulic fluid lines which are not subjected to abrupt changes in pressure, with the exception of lines under gravity head, must have a minimum burst pressure of 408 bar at the maximum operating temperature of 204°C when used with steel connectors and 135°C when used with aluminium connectors.

6.2.9 All hydraulic fluid lines subjected to abrupt changes in pressure must have a minimum burst pressure of 816 bar at the maximum operating temperature of 204°C.

6.3 Crushable structure:

The chassis must include a crushable structure surrounding the fuel tank with the exception of the access hatches, this structure being an integral part of the car's main structure and of the survival cell, and conforming to the following specifications:

6.3.1 The crushable structure must be a honeycomb sandwich construction based on a fire-resistant core of a minimum crushing strength of 18 N/cm² (25 lb/in²). It shall be permitted to pass water pipes through this core, but not fuel, lubricating oil or electrical lines.

The sandwich construction must include two skins of 1.5 mm thickness having a tensile strength of minimum 225 N/mm² (14 tons/in²).

6.3.2 The minimum thickness of the sandwich construction must be 10 mm.

6.4 Tank fillers:

6.4.1 Tank fillers must not protrude beyond the bodywork. Any breather pipe connecting the fuel tank to the atmosphere must be designed to avoid liquid leakage when the car is running and its outlet must not be less than 250 mm from the cockpit opening.

All tank fillers must be designed to ensure an efficient locking action which reduces the risk of accidental opening following a crash impact or incomplete locking after refuelling.

6.4.2 All cars must be fitted with a self-sealing connector which can be used by the scrutineers to obtain fuel from the tank.

This connector must be of the type approved by the FIA.

6.5 Refuelling:

6.5.1 Refuelling during the race is forbidden.

6.5.2 Refuelling the car on the grid by any other means than by gravity from a maximum head of two metres above the ground is forbidden.

6.5.3 Any storage of fuel on board the car at a temperature of more than ten degrees Celsius below the ambient temperature is forbidden.

6.5.4 The use of any specific device, whether on board or not, to decrease the temperature of the fuel below the ambient temperature is forbidden.

ARTICLE 7: OIL AND COOLING SYSTEMS

7.1 Location of oil tanks:

All oil storage tanks must either form an integral part of the engine or be located within the gearbox or bell housing no more than 270 mm and no less than 110 mm in front of the rear wheel centre line.

All oil storage tanks, if situated outside the main structure of the car, must be surrounded by a 10 mm thick crushable structure.

No part of the oil reservoir for engine lubrication may be situated more than 200 mm laterally from the car centre line.

7.2 Longitudinal location of oil system:

No other part of the car containing oil may be situated behind the complete rear wheels.

7.3 Catch tank:

When a car's lubrication system includes an open type sump breather, this breather must vent into a catch tank of at least 2 litres capacity, located forward of the rear wheel centre line.

The use of additional vent pipes for the purpose of venting a catch tank rearwards to the back of the car is not permitted. Measures must be taken to ensure that no liquid can leak from any aeration system.

7.4 Transverse location of oil system:

No part of the car containing oil may be more than 625 mm from the car centre line.

7.5 Oil replenishment:

No oil replenishment is allowed during a race.

7.6 Cooling fluids:

Only ambient air, water, anti-freeze and oil are permitted in the car cooling systems.

7.7 Water radiators:

The water radiator must come from mass production for road cars.

Water radiators have to be installed according the following provisions:

The shorter edge of the rectangular cooling surface must be positioned normal to the reference plane.

In plan view, the longer edge of the rectangular cooling surface must have a minimum angle of 30° to the car centre line.

Formula 4 cars homologated as from 01.01.2019:

~~In plan view, the longer edge of the rectangular cooling surface must have a minimum angle of 30° to the car centre line.~~

In case a water radiator is used on the same side with an intercooler for a turbo charged engine, the position of the water radiator is free.

If a radiator is used on only one side of the car, the unused radiator space must be covered with mesh of a similar size to the radiator.

ARTICLE 8: ELECTRICAL SYSTEMS

8.1 General electrical safety:

The maximum peak voltage on the car must never exceed 60 V.
A fuse must be placed between the ES and the MGU.

8.2 Traction circuit:

The outer covering of cables and harness of the traction circuit not within enclosures or behind barriers shall be marked in purple.

8.3 Starter:

A starter with an electrical or other source of energy carried aboard the car, and able to be controlled by the driver when seated normally, must be fitted.

The starter must be capable of starting the engine at all times.

An exception to this requirement may be granted if an MGU is fitted with enough capability.

8.4 Starting the engine:

A supplementary device temporarily connected to the car may be used to start the engine both on the grid and in the pits.

8.5 Auxiliary ~~Car~~ battery:

The car battery must be installed inside the survival cell, on the floor behind the driver's seat.

The use of a battery with any kind of lithium technology is prohibited.

8.6 Energy Store (ES):

The ES must be located either in the survival cell or in a protected enclosure. In any case the ES must be isolated from the cockpit.

The ES must be surrounded by a fire proof enclosure (V0 level of acceptance respecting the "UL94" US standard).

In any case no part of the ES may lie:

- In front of the front most point of the back of driver's seat

- Behind the engine

- More than 350mm from the car center line.

The technology for the ES is free but it must be certified UN3480 for transportation.

A Battery Management System (BMS) must be used as described in the AppJ Article 253.18.4.4.2.

The ES must be fitted with a pressure release valve. The vapour exiting this valve must be directed outside the cockpit.

8.7 Traction circuit wiring:

Traction circuit cables and harness must stay, seen from top, inside an area delimited by the external contour of the survival cell and engine block.

8.8 Accident data recorders:

The recorder must be fitted and operated:

a) by being rigidly attached to the survival cell using the fixation holes provided;

b) in accordance with the instructions of the ADR manufacturer;

c) symmetrically about the car centre line and with its top facing upwards;.

d) with each of its 12 edges parallel to an axis of the car;

e) less than 50 mm above the reference plane;

f) in a position within the cockpit which is readily accessible at all times from inside the cockpit without the need to remove the skid block or floor;

g) in a position which is normally accessible at the start and finish of an Event;

h) so that the entire unit lies between 40% and 60% of the wheelbase of the car;

i) with its main connector facing forwards;

j) so that its remote status light is visible when the driver is in the cockpit;

k) so that the download connector is easily accessible without the need to remove bodywork.

The recorder must be selected from those within the FIA Institute ADR programme.

8.9 Data logger, sensors, dashboard and/or steering wheel display:

8.9.1 Data logger

The chassis may be equipped with a data logging system.

The ECU may be used as data logger. In case the ECU doesn't provide such functions, it must be possible to add a standalone data logger without modifying or changing the chassis loom.

It must be possible to restrict competitor access to at least the channels defined by Article 5.5.4. The channels must be stored for Power Unit ~~engine~~ support and scrutineering purposes.

8.9.2 Sensors

The chassis may be equipped with only the following sensors:

- Acceleration (1 3-axial sensor)
- Wheel speeds front axle (2 sensors)
- Steering angle (1 sensor)
- Brake pressure front/rear (2 sensors)
- Lap timer/trigger (1 sensor)
- Gear (1 sensor)
- Throttle pedal or valve (1 sensor) only in case of a mechanical throttle

8.9.3 Dashboard/steering wheel display

The car may be equipped with a dashboard or steering wheel display. A functional check for the sensors mentioned in Article 8.9.2 must be possible only by using the dashboard or steering wheel display.

8.10 Electrical system connection interfaces:

The purpose of the regulations under Article 8.10 below is to minimise the effort when changing the make of Power Unit ~~engine~~.

The connection interfaces, connector specifications / positions and chassis loom wiring defined by Appendix 3 are mandatory.

8.11 Throttle fail safe :

Every car must be equipped with a throttle fail safe algorithm, which, in case throttle and brake pedal are pressed at the same time, overrides the throttle and cuts the engine or closes the throttle and cuts the power to the MGU.

The function and the parameter of the fail-safe algorithm must be communicated to the FIA.

ARTICLE 9: TRANSMISSION TO THE WHEELS

Preamble

The gearbox should be developed or designed to ensure that the life between revisions, where practicable, exceeds 10,000 km.

9.1 Gearbox and semi-automatic shift system homologation:

Only gearboxes and semi-automatic shift systems which have been homologated in accordance with the Formula 4 Homologation Regulations may be used during an event.

9.2 Four-wheel drive:

Four-wheel drive cars are forbidden.

9.3 Type of gearbox:

9.3.1 All cars must have no more than six forward gears.

9.3.2 The maximum number of numerical change gear ratio pairs a competitor has available to him during a Championship season and all such gear ratio pairs must be declared in the sporting regulations of a Championship.

9.3.3 No forward gear ratio pair may be:

a) Less than 12.75 mm wide when measured across the gear tooth at the root diameter or at any point 1 mm above or below the root diameter. Above this area, each side of the gear teeth may be chamfered by a maximum of 10˚. In addition, a chamfer or radius not exceeding 2.0 mm may be applied to the sides and the tip of the teeth.

b) Less than 600 g (excluding any integral shaft or collar). If an integral shaft or collar is to be excluded, the mass of this may be shown by calculation assuming the gear to be 12.75 mm wide and the shaft geometry to be the same as that where slide-on gears are used.

9.3.4 The distance between the centres of layshaft and mainshaft may be no less than 74,8 mm and no more than 79 mm.

9.3.5 Gear ratios must be made from steel.

9.3.6 The rotational axis of the layshaft must be in line with the crankshaft's rotational axis. All other rotational axes must also be parallel to the reference plane.

9.3.7 From the clutch to the rear wheels, only two pairs of reduction gears are allowed per ratio (except for the reverse gear).

9.3.8 Transverse gearboxes or gearboxes forward of the rear wheel axis are forbidden.

9.3.9 Automatic gearboxes, torque biasing, differentials with limited slip and locked differentials are prohibited.

9.3.10 Forced lubrication is forbidden.

9.4 Reverse gear:

All cars must have a reverse gear which, at any time during the event, can be selected while the engine is running and used by the driver when seated normally.

9.5 Traction control:

No car may be equipped with a system or device which is capable of preventing the driven wheels from spinning under power or of compensating for excessive torque demand by the driver.

Any device or system which notifies the driver of the onset of wheel spin is prohibited.

9.6 Rear suspension pickup points and mounting points:

The gearbox must provide the following pickup points:

- Rear suspension in accordance with Drawings 1.9a and 1.9b
- Suspension damper and rocker arms in accordance with Drawings 1.9a, 1.9b and 1.9f
- Gearbox to Power Unit ~~engine~~ mounting points in accordance with Drawing 1.9d
- Rear crash box in accordance with Drawings 1.9a and 1.9c

The maximum outer shape of the gearbox protruding inside the rear crashbox must be respected as described in 1.9c.

9.7 Driveshafts:

Driveshafts must be made from steel. They must be solid and have an outside diameter of not less than 21 mm.

The CV joint assembly must not form an integral part of the driveshaft assembly and must be a homokinetic type joint.

9.8 Semi-automatic shift system:

The ECU may be used as gearbox control unit. In case the ECU doesn't provide such functions, it must be possible to add a standalone gearbox control unit without modifying or changing the chassis or gearbox loom.

Only electric or pneumatic semi-automatic shift systems are permitted.

The manufacturer responsible for the gearbox control unit must provide a mechanism that allows the scrutineers to accurately identify the software version loaded on the gearbox control unit.

9.9 Shifting aid:

9.9.1 A single automatic ignition cut which is completely controlled by the homologated ECU is permitted during one manual gear change. A different cut time for each gear may be homologated once during the ECU homologation period by the Power Unit ~~engine~~ manufacturer~~/tuner~~.

9.9.2 A device which prohibits driver downshift attempts, if the calculated engine rpm for the destination gear would be higher than the maximum engine rpm allowed by the Power Unit ~~engine~~ manufacturer, is permitted and must be controlled by the homologated ECU.

ARTICLE 10: SUSPENSION AND STEERING

10.1 General:

The suspension must be a double triangle wishbone configuration with a pushrod.

10.1.1 Front suspension

The front suspension must consist only of two dampers including springs, two rocker arms and one anti-roll bar. Any kind of third element is forbidden.

The anti-roll bar must be a torsion type bar. The torsion bar must be a solid bar made from conventional steel-based alloy and must have a circular cross section. It may be adjustable with up to 5 different settings on each side of the torsion bar.

The rocker arms must be directly actuated by the pushrods. The dampers and the anti-roll bar must be directly actuated by the rocker arms.

The rocker arm support and the dampers must be situated on top of the survival cell. The anti-roll bar must be situated on top or in front of the survival cell.

10.1.2 Rear suspension

The rear suspension must consist only of two dampers including springs, two rocker arms and one anti-roll bar. Any kind of third element is forbidden.

The anti-roll bar must be a torsion type bar. The torsion bar must be a solid bar made from conventional steel-based alloy and must have a circular cross section. It may be adjustable with up to 5 different settings on each side of the torsion bar.

The rocker arms must be directly actuated by the pushrods. The dampers and the anti-roll bar must be directly actuated by the rocker arms.

The pickup points in accordance with Drawings 1.9a, 1.9b and 1.9f must be used.
The pickup points for the rear anti-roll bar attachment must be within the area defined by Drawing 1.10.

10.2 Active suspension:

Active suspension is forbidden.

10.3 Chromium plating:

Chromium plating of any steel suspension component is forbidden.

10.4 Suspension members:

10.4.1 All suspension members must be made from conventional steel based alloy.

10.4.2 In order to help prevent a wheel becoming separated in the event of all suspension members connecting it to the car failing, flexible tethers each with a cross sectional area greater than 110mm² must be fitted. The sole purpose of the tethers is to prevent a wheel becoming separated from the car, they should perform no other function.

The tethers and their attachments must also be designed in order to help prevent a wheel making contact with the driver's head during an accident.

Each wheel must be fitted with one tether which complies with FIA standard 8864-2013 providing a minimum energy absorption of 6kJ (FIA Technical List N°.37).

Each tether must have its own separate attachment which :

a) Is able to withstand a tensile force of 70kN.

b) Is able to accommodate a tether end fitting with a minimum inside diameter of 15mm.

Each tether must exceed 450mm in length and must utilise end fittings which result in a tether bend radius greater than 7.5mm.

10.4.3 The cross sections of each member of each suspension component must be either circular, oval (symmetrical with two sides being flat and parallel to each other and the other two sides semi-circular) or elliptic (the complete outer shape following the mathematical function $x^2/a^2 + y^2/b^2 = 1$ with x,y being the coordinates and a,b the half-axes) with an aspect ratio no greater than 2:1. The cross section must be symmetrical around its two major axes and remain the same over its entire length.

All suspension components may, however, have sections with a different cross section, provided that these are adjacent to their inner and outer attachments, have an aspect ratio less than 2:1 and form no more than 30% of the total distance between the attachments of the relevant member. In addition 2/3 of the above defined sections may have an aspect ratio great than 2:1.

For the sole purpose of protecting wheel tethers and brake lines, non-structural shrouds are admitted. The overall cross section including the non-structural shroud must remain symmetrical around its major axis with an aspect ratio no greater than 3:1.

10.4.4 No major axis of a cross section of a suspension member may subtend an angle greater than 5° to the reference plane when measured parallel to the car centre line.

The major axis of a cross section of one wishbone arm must be parallel to the other one.

10.4.5 Brackets for fixing the suspension members to the survival cell may have only one flat, plane surface in contact with the outside of the survival cell. The attachment surface on the survival cell side may be recessed only up to 1 mm.

When assessing whether the car is in compliance with Article 10.4.5, the side intrusion panel defined in Article 15.3.8 is not considered as survival cell.

10.4.6 Flexible joints of any kind are forbidden.

10.4.7 The rear wishbones and track rod may have only 4 attachment points on either side of the car, which means that one attachment point must be used jointly for wishbone and track rod.

10.5 Sprung suspension:

Cars must be fitted with sprung suspension.

In order to avoid mass dampers, the suspension system must be so arranged that its response results only from changes in load applied to the wheels.

The springing medium must not consist solely of bolts located through flexible bushes or mountings.

There must be movement of the wheels to give suspension travel in excess of any flexibility in the attachments.

10.6 Springs:

Only conventional coil springs may be used.

Spring rates must lie between 500 lbs/in and 1000 lbs/in.

10.7 Suspension damper:

10.7.1 Only conventional hydraulic, single tube dampers with one piston and maximum two-way adjustment are permitted.

10.7.2 Damper fluid may be pressurised.

10.7.3 Damper characteristics may vary only as a function of damper piston speed, created only by suspension movement. Any other variation of damper characteristics, such as those which vary as a function of position, frequency or acceleration, is prohibited.

10.7.4 The use of blow-off valves, inertia valves, external electronic inputs, the storage of energy or any hydraulic connections between dampers is prohibited.

10.7.5 Only one type of damper for front and rear is permitted (except for top eye).

10.7.6 The damper must comply with the following specification:

- Stroke: no less than 40 mm and no more than 50 mm
- Maximum outer diameter: 55 mm
- Compatible with 36 mm ID springs
- Optional external canister with max. 170 mm length and 50 mm diameter
- Fully extended length between pickup points 310 mm
- Bolt diameter of fixation points 8 mm or 5/16"

10.7.7 The use of any kind of bump stop is prohibited.

10.8 Suspension uprights:

10.8.1 Only one type of upright may be used for all four wheels. The upright must be a solid part made from machined aluminium-based alloy or casting. Sheet metal is forbidden.

Only the following parts may be attached to the upright:

- Wheel speed sensors (only front upright)
- Suspension members
- Brake callipers
- Wheel bearing
- Wheel tether

10.8.2 The complete upright assembly front and rear must have a minimum weight of 12,000 g at any time.

For the stipulation of the weight of an upright assembly, only the wheel, the bolts of the uniball joints, the driveshaft, the wheel tethers and the brake or sensor lines (at the first connection) may be removed.

10.9 Wheel bearings:

The wheel bearings must be fully encapsulated 3rd generation bearings coming from a road car.

Each wheel bearing must have a minimum weight of 2400 g and comply with the dimensions given in Drawing 1.7.

10.10 Steering:

10.10.1 The steering must consist of a mechanical link between the driver and the wheels. From the steering wheel to the front wheels, only one pair of gear ratios is allowed. One or two cardan joints are allowed between the steering wheel and the steering rack.

10.10.2 Four-wheel steering is forbidden.

10.10.3 The steering wheel, steering column and steering rack assembly must be subjected to an impact test. Details of this test procedure may be found in Article 16.3.

10.10.4 No part of the steering wheel or column, nor any part fitted to them, may be closer to the driver than a plane formed by the entire rear edge of the steering wheel rim. All parts fixed to the steering wheel must be fitted in such a way as to minimise the risk of injury in the event of a driver's head making contact with any part of the wheel assembly.

ARTICLE 11: BRAKES

11.1 Separate circuits:

All cars must have a brake system which has at least two separate circuits operated by the same pedal. This system must be designed so that if leakage or failure occurs in one circuit, the pedal shall still operate the brakes on at least two wheels.

11.2 Brake discs:

11.2.1 Brake discs must be made from ferrous material.

11.2.2 The disc bell must form an integral part of the brake disc.

11.2.3 Brake discs may neither be drilled nor have grooves. They must be ventilated discs with a minimum thickness of 19.9 mm when new.

11.2.4 The weight of a used brake disc must not be less than 4200 g.

11.2.5 The brake disc must comply with the dimensions given in Drawing 1.8.

11.2.6 The brake disc must come from mass production for road cars.

11.3 Brake callipers:

The weight of a brake calliper must not be less than 1300 g.

Monobloc callipers are forbidden. Only callipers made from casting are admitted.

A maximum of 2 pistons per calliper are permitted.

A brake calliper providing a function of any kind whatsoever that moves the brake piston backwards when releasing the brake pedal is forbidden.

Only two type of calliper per car are admitted.

Viewed from the side, no part of the brake calliper may lie between two lines rectangular to each other, starting from the front wheel centre line at 45 degrees below a horizontal plane through the front wheel centre line.

Any type of floating calliper installation is forbidden.

11.4 Air ducts:

Air ducts for the purpose of cooling brakes or any other parts with a similar function are forbidden.

Formula 4 cars homologated as from 01.01.2019:

Air ducts on rear wheels for the purpose of cooling brakes or any other parts with a similar function are forbidden.

11.5 Liquid cooling:

Liquid cooling of any part of the braking system is forbidden.

11.6 Brake pressure modulation:

Anti-lock brakes and power braking are forbidden.

11.7 Brake pads

A competitor may choose at maximum between three different types of homologated brake pads.

For one championship, the total number of brake pads may be more than three. The brake pad types will be then split into groups of three each. A competitor has to choose one group for the complete season.

The brake pads available must be defined in the Sporting Regulations of each Championship.

ARTICLE 12: WHEELS AND TYRES

12.1 Location:

Complete wheels must be external to the bodywork in plan view, with the rear aerodynamic device removed.

12.2 Wheel material:

All wheels must be a single piece type, made from aluminium-based alloy.

12.3 Dimensions and weights:

12.3.1 Minimum/Maximum complete front wheel width: 200 mm/250 mm

Minimum/Maximum complete rear wheel width: 240 mm/290 mm

Wheel bead diameter: 330 mm (± 2.5 mm)

12.3.2 These measurements will be taken horizontally at axle height.

12.3.3 The weight of a rim must not be less than 5000 g.

12.3.4 The rim must have 12 bores for drive pegs, homogeneously distributed on an 100 mm diameter perpendicular to the rotational axis.

12.3.5 The inner diameter of the rim, which is in contact with the wheel hub, must have a diameter of 56,5 mm.

12.4 Maximum number of wheels:

The number of wheels is fixed at four.

12.5 Wheel attachment:

12.5.1 A safety spring must be in place on the wheel nut throughout the event and must be replaced after each wheel change. These springs must be painted dayglo red or orange.

12.5.2 Wheel nuts may only have flat, plane or cylindrical surfaces in contact with rims.

12.6 Pressure control valves:

Pressure control valves on the wheels are forbidden.

12.7 Aerodynamic influence :

Any device, construction or part of the wheel that is designed for the purpose of guiding or influencing the airflow through the wheel, or whose purpose is anything other than transferring load from the tyre to the wheel hub, is forbidden.

ARTICLE 13: COCKPIT

13.1 Cockpit opening:

In order to ensure that the opening giving access to the cockpit is of adequate size, the template shown in Drawing 1 will be inserted into the survival cell and bodywork.

During this test the steering wheel, steering column, seat and all padding may be removed and:

a) the template must be held horizontal and lowered vertically from above the car until its lower edge is 525 mm above the reference plane;

b) referring to Drawing 1.1, the rear edge of the template must be 1600 mm ± 10 mm behind the front wheel centre line.

Any measurements made from the cockpit entry template (when referred to in Articles 3.9.3, 3.12.2, 3.12.4, 3.13, 3.20, 13.1, 14.3.3, 15.2.2, 15.3.6 and 18.7), must also be made while the template is held in this position.

Furthermore, the forward extremity of the cockpit opening, even if structural and part of the survival cell, must be at least 50 mm in front of the steering wheel.

The driver must be able to get in and out of the cockpit without it being necessary to open a door or remove any part of the car other than the steering wheel. When seated normally, the driver must be facing forwards and the rearmost part of his crash helmet may be no more than 125 mm forward of the rear edge of the cockpit entry template.

From his normal seated position, with all seat belts fastened and while wearing his usual driving equipment, the driver must be able to remove the steering wheel and get out of the car within 5 seconds and then replace the steering wheel in a total of 10 seconds.

For this test, the position of the steered wheels will be determined by the scrutineer and, after the steering wheel has been replaced, steering control must be maintained.

13.2 Steering wheel:

13.2.1 The steering wheel must be fitted with a quick-release mechanism. Its method of release must be by pulling a concentric flange installed on the steering column behind the wheel.

13.2.2 The steering wheel rim must be continuously closed but the shape is free.

Formula 4 cars homologated as from 01.01.2019:

13.2.3 The centre of the steering wheel may be no more than 690mm forward of the plane C-C.

13.3 Internal cross section:

The internal cross section of the cockpit from the soles of the driver's feet to behind his seat shall at no point be less than 70,000 mm².

A free vertical cross section, which allows the template shown in Drawing 1.2 to be passed vertically through the cockpit, must be maintained over its entire length.

The only things that may encroach on these two areas are the steering wheel and padding.

The driver, seated normally with his seat belts fastened and with the steering wheel removed, must be able to raise both legs together so that his knees are past the plane of the steering wheel in the rearward direction. This action must not be obstructed by any part of the car.

13.4 Clutch, brake and throttle pedal :

The clutch, brake and throttle pedal may only be operated by the driver's foot. Any device or construction that is designed to influence the clutch or brake pressure or the throttle opening by any other means is forbidden.

The only exception to the above are homologated functionalities provided by the ECU.

ARTICLE 14: SAFETY EQUIPMENT

14.1 Fire extinguishers :

14.1.1 All cars must be fitted with a fire extinguishing system which must discharge into the cockpit and into the Power Unit ~~engine~~ compartment from the FIA Technical List N°16 : "Extinguisher systems homologated by the FIA".

14.1.2 The number of nozzles in the cockpit and Power Unit ~~engine~~ compartment must be the same as described in the installation manual (the manuals are listed on the FIA website).

14.1.3 Each pressure vessel must be equipped with a means of checking its pressure which may vary according to the type of extinguishant used. The fill pressure is indicated on the FIA label.

14.1.4 All parts of the extinguishing system must be situated within the survival cell and all extinguishing equipment must withstand fire.

14.1.5 Any triggering system having its own source of energy is permitted, provided it is possible to operate all extinguishers should the main electrical circuits of the car fail.

The driver must be able to trigger the extinguishing system manually when seated normally with his safety belts fastened and the steering wheel in place.
Furthermore, a means of triggering from the outside must be combined with the circuit breaker switch. It must be marked with a letter "E" in red inside a white circle of at least 50mm diameter with a red edge.

14.1.6 The system must work in any position, even when the car is inverted.

14.1.7 Extinguisher nozzles must be suitable for the extinguishant and be installed in such a way that they are not directly pointed at the driver's face.

14.2 Master switch:

14.2.1 The driver, when seated normally with safety belts fastened and the steering wheel in place, must be able to cut off all electrical circuits to the ignition, all fuel pumps and the rear light by means of a spark-proof circuit breaker switch. It must also cut off the traction circuit.

This switch must be located on the dashboard and must be clearly marked by a symbol showing a red spark in a white-edged blue triangle.

14.2.2 There must also be an exterior switch, with a horizontal handle, which is capable of being operated from a distance by a hook. This switch must be situated at the base of the main rollover structure on the right hand side. It must be clearly marked by a symbol showing a red spark inside a white-edged, blue equilateral triangle; each side of this triangle must be at least 50 mm long.

14.3 Rear-view mirrors:

14.3.1 All cars must have at least two mirrors mounted so that the driver has visibility to the rear and along both sides of the car.

14.3.2 The reflective surface of each mirror must be at least 150 mm wide, this being maintained over a height of at least 50 mm. Additionally, each corner may have a radius no greater than 10 mm.

14.3.3 No part of the mirror's reflective surface may be less than 250 mm from the car centre line, less than 550 mm forward or more than 750 mm forward of the rear edge of the cockpit entry template.

No part of the rear-view mirrors, the mirror housings or the mirror mountings may be situated more than 500 mm from the car centre line.

14.3.4 The scrutineers must be satisfied by a practical demonstration that the driver, when seated normally, can clearly define the vehicles behind him.

For this purpose, the driver shall be required to identify any letter or number, 150 mm high and 100 mm wide, placed anywhere on boards behind the car, the positions of which are detailed below:

Height : from 400 mm to 1000 mm from the ground.

Width : 2000 mm either side of the centre line of the car.

Position : 10 m behind the rear axle line of the car.

14.4 Safety belts:

The wearing of two shoulder straps, one abdominal strap and two straps between the legs is mandatory. These straps must be securely fixed to the car and must comply with FIA standard 8853/98 or 8853-2016.

Formula 4 cars homologated as from 01.01.2019:

The wearing of two shoulder straps, one abdominal strap and two straps between the legs is mandatory. These straps must be securely fixed to the car and must comply with FIA standard 8853-2016.

14.5 Rear light:

All cars must have a red light that must be in working order throughout the event, which:

a) is a model approved by the FIA for F3 cars;

b) faces rearwards at 90° to the car centre line;

c) is clearly visible from the rear;

d) is not mounted more than 100 mm from the car centre line;

e) is at least 280 mm above the reference plane;

f) is no less than 450 mm behind the rear wheel centre line, measured to the face of the lens and parallel to the reference plane;

g) can be switched on by the driver when seated normally in the car,

h) must have a minimum peak intensity of 800 Lux covering a minimum angle of 8 degrees vertically and 25 degrees horizontally, when measured at a distance of 1m from the centre of the rear face at 23°C ambient temperature after 15 minutes warm up duration powered from a 12V DC supply,

i) should flash at maximum 4Hz frequency with a minimum 40% duty cycle,

The measurements being taken to the centre of area of the lens.

The performance of any design will be verified by the FIA Technical Department before approval.

14.6 Headrests and head protection:

14.6.1 All cars must be equipped with three areas of padding for the driver's head which :

a) Are so arranged that they can be removed from the car as one part.

b) Are located by two horizontal pegs behind the driver' head and two fixings, which are clearly indicated and easily removable without tools, at the front corners.

c) Are made from a material which is corresponding to the specification :
CONFOR CF45 (Blue) or CONFOR CF45M (Blue) (FIA Technical List n°17)

d) Are covered, in all areas where the driver's head is likely to make contact, with two plies of Aramid fibre/epoxy resin composite pre-preg material in plain weave 60gsm fabric with a cured resin content of 50% (+/-5%) by weight.
Alternatively, one ply of 60 gsm and one ply of 170 gsm may be used.

Headrests manufactured after the 1.1.2017 must be constructed of one ply of 60 gsm and one ply of 170 gsm Aramid fibre following the above specifications.

e) Are positioned so as to be the first point of contact for the driver's helmet in the event of an impact projecting his head towards them during an accident.

14.6.2 The first area of padding for the driver's head must be positioned behind him and be between 75 mm and 90 mm thick over an area of at least 40,000 mm². If necessary, and only for driver comfort, an additional piece of padding no greater than 10mm thick may be attached to this headrest provided it is made from the same material.

14.6.3 The two further areas of padding for the driver's head must be installed each side of him. The upper surfaces of these areas of padding must be at least as high as the survival cell over their entire length.

Each area of padding must be between 75mm and 90mm thick over an area of at least 40000mm², at least 25000mm² of which must lie directly alongside the driver's helmet. The thickness will be measured perpendicular to the car centre line.

Furthermore, any void between these areas of padding and the area described in Article 14.6.2 must also be completely filled with the same material.

If necessary, and only for driver comfort, an additional piece of padding no greater than 20mm thick may be attached to this headrest provided it is made from the same material which incorporates a low friction surface.

14.6.4 Forward of the side areas of padding further cockpit padding must be provided on each side of the cockpit rim. The purpose of the additional padding is to afford protection to the driver's head in the event of an oblique frontal impact and must therefore be made from the same material as the other three areas of padding.

These extensions must :

a) Be symmetrically positioned about the car centre line and a continuation of the side areas of padding.

b) Be positioned with their upper surfaces at least as high as the survival cell over their entire length.

c) Have a radius on their upper inboard edge no greater than 10mm.

d) Be positioned in order that the distance between the two is no less than 320mm.

e) Be as high as practicable within the constraints of driver comfort.

14.6.4 All of the padding described above must be so installed that if movement of the driver's head, in any expected trajectory during an accident, were to compress the foam fully at any point, his helmet would not make contact with any structural part of the car.

Furthermore, for the benefit of rescue crews the method of removal must also be clearly indicated.

14.6.5 No part of the padding described above may obscure sight of any part of the driver's helmet when he is seated normally and viewed from directly above the car.

14.7 Seat, seat fixing and removal :

14.7.1 In order that an injured driver may be removed from the car in his seat following an accident, all cars must be fitted with a seat complying with the FIA Specification for Extractable Seats in Open Cockpit Cars.

14.7.2 If the seat is secured, it must be done so with no more than two bolts. If bolts are used they must :

a) Be clearly indicated and easily accessible to rescue crews.

b) Be fitted vertically.

c) Be removable with the same tool for all teams and which is issued to all rescue crews.

14.7.3 The seat must be equipped with receptacles which permit the fitting of belts to secure the driver and one which will permit the fitting of a neck support.

14.7.4 The seat must be removable without the need to cut or remove any of the seat belts.

A test must be carried out on the seat when fitted to a fully representative car with the driver present. Once the buckle has been released it must be possible to extract the seat from the car without any further adjustment of the harness. The seat must be moved in a direction following the vertical axis of the car.

14.7.5 Any seat made from foam must be covered with a non-flammable and non-combustible material.

14.8 Head and neck supports:

No head and neck support worn by the driver may be less 25 mm from any structural part of the car when he is seated in his normal driving position.

14.9 Towing device:

Each car must be equipped at the rear with a sturdy towing device which must be marked in fluorescent red.

ARTICLE 15: CAR CONSTRUCTION

15.1 Materials used for car construction:

15.1.1 The use of magnesium is forbidden.

15.1.2 The use of titanium and ceramic materials is forbidden. Ceramic materials (e.g. Al_2O_3, SiC, B_4C, Ti_5Si_3, SiO_2, Si_3N_4) – these are inorganic, non-metallic solids.

15.1.3 No parts of the car may be made from metallic materials with a beryllium content greater than 3%m/m**.**

15.1.4 Within composite structures, the strain-to-failure of any fibrous reinforcing material must not be less than 1.5%.

15.1.5 The use of carbon or aramid fibre reinforcing materials in composite structures is forbidden except in the survival cell, frontal impact-absorbing structure, rear impact-absorbing structure, rollover structures, headrest and wheel tethers.

15.1.6 The front wing profile must be made of aluminium-based alloy, carbon or glass fibre reinforcing materials.

The rear wing profiles must be made of aluminium-based alloy.

The front wing endplates must be made from plastics or wood.

The rear wing endplates must be made of aluminium-based alloy.

15.1.7 Any repairs to the survival cell or nosebox must be carried out in accordance with the manufacturer's specifications, in a repair facility approved by the manufacturer.

15.1.8 The car may not be used in another event until the technical passport has been completed satisfactorily.

15.1.9 In exception to the above, ERS materials are free.

15.2 Roll structures:

15.2.1 The basic purpose of safety structures is to protect the driver. This purpose is the primary design consideration.

15.2.2 All cars must have two roll structures.

The highest point of the principal roll structure may be no more than 30 mm behind the rear edge of the cockpit entry template. The secondary structure must be in front of the steering wheel but no more than 250 mm forward of the top of the steering wheel rim in any position.

The two roll structures must be of sufficient height to ensure that the driver's helmet and his steering wheel are at least 70 mm and 50 mm respectively below a line drawn between their highest points at all times.

15.2.3 The principal structure must pass a static load test, details of which may be found in Article 17.1.

Furthermore, each car manufacturer must supply detailed calculations which clearly show that the principal structure is capable of withstanding the same load when the longitudinal component is applied in a forward direction. Alternatively, and only following a request from the car manufacturer, the principal roll structure may be subjected to a further static load test using the same procedure as laid out in Article 17.1, but carried out in a forward direction.

The secondary structure must be capable of withstanding a vertical load of 75 kN applied to the top of the structure. Each car manufacturer must supply detailed calculations which clearly show that the structure is capable of withstanding the vertical load of 75 kN. Alternatively, and only following a request from the car manufacturer, the secondary roll structure may be subjected to a static load test, details of which may be found in Article 17.2.

15.2.4 The design concept of the roll structures required by Article 15.2.2 shall be free. However, the principal roll structure must have a minimum structural cross section, in vertical projection, of 10,000 mm^2, across a horizontal plane passing 50 mm lower than its highest point.

Formula 4 cars homologated as from 01.01.2019:

15.2 Roll structures :

15.2.1 All cars must have two roll structures which are designed to help prevent injury to the driver in the event of the car becoming inverted.

The principal structure must be at least 940mm above the reference plane at a point 30mm behind the rear face of the cockpit entry template.

The secondary roll structure, which is not considered part of the survival cell, must be positioned symmetrically about the car centre plane with its front fixing axis 975mm forward of the rear face of the cockpit entry template and 640mm above the reference plane. The mounting faces for the rearward fixings must lie on a plane parallel to and 675mm above the reference plane.

The driver's helmet and steering wheel must be arranged such that they lie below a line drawn between the front fixing axis of the secondary roll structure and a point 75mm vertically below the highest point of the principal roll structure.

15.2.2 The principal structure must pass ~~two~~ a static load test details of which may be found in Article 17.1 ~~17.2~~.

Furthermore, each car manufacturer must supply detailed calculations which clearly show that the principal structure is capable of withstanding the same load when the longitudinal component is applied in a forward direction. Alternatively, and only following a request from the car manufacturer, the principal roll structure may be subjected to a further static load test using the same procedure as laid out in Article 17.1, but carried out in a forward direction.

15.2.3 The secondary roll structure attachments to the survival cell must pass four static load tests details of which may be found in Article 17.2.

15.2.4 The principal roll structure must have a minimum enclosed structural cross section of 10000mm², in vertical projection, across a horizontal plane 50mm below its highest point. The area thus established must not exceed 200mm in length or width and may not be less than 10000mm² below this point.

15.2.5 The secondary roll structure must ~~be supplied by the FIA designated manufacturer~~ comply with the FIA standard 8869-2018 Part 2 (Steel).

15.2.6 In addition to the volume allowed by article 3.12.2, the secondary roll structure may have a fairing attached, provided it is situated on top of the survival cell within a volume defined by the following planes:
- Two planes parallel to the car centre line, which are defined by points 15mm and 40mm from the car centre line and 700mm and 635mm above the reference plane
- Two planes to the car centre line and 880mm and 1125mm respectively forward of the rear face of the cockpit entry template
- Two planes parallel to and 700mm and 635mm above the reference plane

15.3 Survival cell specifications:

15.3.1 In order that every survival cell is readily identifiable by scrutineers, each one produced must incorporate three permanently embedded FIA-approved transponders which are accessible for verification at any time.

15.3.2 The survival cell must extend from behind the fuel tank in a rearward direction to a point at least 150 mm in front of the front wheel centre line.

The survival cell must have an opening for the driver, the minimum dimensions of which are given in Article 13.1. Any other openings in the survival cell must be of minimum size to allow access to mechanical components.

The safety structures described in Article 15.2 must be a part of the survival cell or solidly attached to it.

15.3.3 All Power Unit ~~engine~~ mounting points on the survival cell as shown in Drawing 2.1 must lie in one plane which is normal to the reference plane and normal to the car centre line. A tolerance of 2 mm in X-direction (along the car centre line) is permitted for manufacturing tolerances and the use of steel bushes.

15.3.4 When he is seated normally, the soles of the driver's feet, resting on the pedals in the inoperative position, shall not be situated to the fore of the vertical plane passing through the front wheel centre line.

Should the car not be fitted with pedals, the driver's feet at their maximum forward extension shall not be situated to the fore of the above-mentioned vertical plane.

15.3.5 In front of the survival cell, an impact-absorbing structure must be fitted. This structure need not be an integral part of the survival cell but must be solidly attached to it.

It must have a single external cross section, in horizontal projection, of more than 9000 mm² at a point 50 mm behind its forwardmost point. Furthermore:

a) no part of this cross section may lie more than 200 mm or less than 130 mm above the reference plane;

b) the centre of area of this section must be no more than 160 mm above the reference plane and no less than 750 mm forward of the front wheel centre line.

It must have one single external cross section, in horizontal projection, of more than 100,000 mm² at its rearmost point. The centre of area of this section must be no more than 325 mm above the reference plane.

From the point 50 mm behind its forwardmost point, the external cross section, in horizontal projection, must increase and may not stay constant or diminish. The only exception that may be made is for its attachment to the survival cell.

The first 100 mm behind its forwardmost point must be exchangeable and/or repairable without exchanging the complete impact-absorbing structure.

15.3.6 The survival cell (as presented for the crash test/with all removable parts removed) must weigh a minimum of 52 kg (without side intrusion panels as per Article 15.3.8).

The minimum external width of the survival cell forward of the front wheel centre line is 360 mm.

The minimum external width of the survival cell behind the front wheel centre line is 380 mm.

The above-mentioned external width must be maintained for a minimum height of 250 mm along the whole length of the survival cell.

The minimum external width of the survival cell 720 mm forward of the rear face of the cockpit entry template is 600 mm.

The minimum external width of the survival cell from a point 200 mm forward of the rear face of the cockpit entry template to a point 350 mm forward of the rear face of the cockpit entry template is 660 mm.

The above-mentioned external width must be maintained for a minimum height of 250 mm at minimum 200 mm above the reference plane.

Measured at a point lying above the front wheel centre line, the minimum internal height of the survival cell must be at least 300 mm over a width of at least 150 mm, maintained for a minimum length of 100 mm.

Measured from the reference plane, the minimum height of the survival cell between the two rollover structures is 550 mm.

The surface parallel to and 150 mm above the reference plane, from 150 mm forward of to 550 mm behind the front wheel centre line, symmetrical to the car centre line and 350 mm wide, must lie inside the survival cell.

When the test referred to in Article 13.1 is carried out and the template is in position with its lower edge 525 mm above the reference plane, the shape of the survival cell must be such that no part of it is visible when viewed from either side of the survival cell and from behind the survival cell.

The parts of the survival cell which are situated each side of the driver's head must be no more than 550 mm apart.

In order to ensure that the driver's head is not unduly exposed and for him to maintain good lateral visibility he must, when seated normally and looking straight ahead with his head as far back as possible, have his eye visible when viewed from the side. The centre of gravity of his head must lie below the top of the survival cell at this position. When viewed from the side of the car, the centre of gravity of the driver's head will be deemed to be the intersection of a vertical line passing through the centre of his ear and a horizontal line passing through the centre of his eye.

The minimum height of the survival cell behind the driver is 750 mm from the reference plane. This height must be maintained for at least 100 mm either side of the car centre line and from the rear edge of the cockpit opening to a point at least 150 mm rearwards on the car centre line. Outside this prescribed minimum area of 200 mm x 150 mm the height may decrease at a linear rate to a height of 655 mm from the reference plane with a maximum angle of 70° measured parallel to the reference plane and normal to the car centre line and must join the horizontal line at 655 mm with a radius of at least 20 mm.

Formula 4 cars homologated as from 01.01.2019:

The minimum height of the survival cell behind the driver is 780 mm from the reference plane. This height must be maintained for at least 100 mm either side of the car centre line and from the rear edge of the cockpit opening to a point at least 150 mm rearwards on the car centre line. Outside this prescribed minimum area of 200 mm x 150 mm the height may decrease at a linear rate to a height of 655 mm from the reference plane with a maximum angle of 70° measured parallel to the reference plane and normal to the car centre line and must join the horizontal line at 655 mm with a radius of at least 20 mm.

The surfaces joining the prescribed minimum area of 200 mm x 150 mm at a height of 750 mm from the reference plane and the area of the survival cell at the height of 655 mm from the reference plane must be flat or have a concave radius, this radius being applied after the straight line with the correct angle connecting the two areas has been defined.

From the rear edge of the cockpit entry template until the rear end of the survival cell, each cross section of the survival cell taken normal to the car centre line must:

a) be symmetrical about the car centre line on its external shape.

b) have a minimum height of 655 mm maintained over a total width of at least 520 mm.

An exception to this might be made for any opening in this area accessing the fuel tank and/or refuelling connectors.

15.3.7 In order to give additional protection to the driver in the event of a side impact, a flat test panel of uniform construction, which is designed and constructed in order to represent a section of the survival cell sides, must pass a strength test. Details of the test procedure may be found in Article 18.4.

With the exception of local reinforcement and/or inserts, the lateral parts of the survival cell must be manufactured to the same specification as a single panel which satisfies the requirements of Article 18.4. Parts to this tested specification must cover an area which:

a) begins at least 250 mm high at the front wheel centre line;

b) tapers at a linear rate to at least 350 mm high at the front of the cockpit opening and remains at this height to the rear of the survival cell;

c) is no less than 100 mm above the reference plane between the front of the cockpit opening and the rear of the survival cell.

Any openings or cut-outs in this area must be of the minimum size to allow access to mechanical components.

15.3.8 Once the requirements of Articles 15.2.3, 15.3.2, 15.3.4, 15.3.6, 15.3.7, 15.4.1, 15.4.3, 15.4.4, 16.1, 17.1, 17.2, 18.1, 18.2, 18.3, 18.4, 18.6 and 18.7 have been met, panels no less than 7.3 mm thick must then be permanently attached to the survival cell sides. These panels must:

a) in a longitudinal sense, cover the area lying between two vertical planes, one 50 mm behind the front wheel centre line and one 50 mm to the rear of the template. A 50 mm horizontal linear taper may be included at both ends;

b) in a vertical sense, cover an area which has been constructed in accordance with Article 15.3.7;

c) cover the area around any front suspension attachment, which lies behind the front wheel centre line. Cut-outs are allowed only for suspension attachment brackets. The cut-out may not exceed a surface of 1500mm² for each attachment point;

d) Be constructed from 11 plies of S2 Glass according to the following precise lay-up details:

The panel shall be constructed from S2 Glass or a FIA approved substitute, impregnated with a toughened, elevated cure temperature, epoxy resin system.

The construction of the panel shall be quasi isotropic and shall avoid darts, joins or gaps in any ply, apart from those required to cover complex geometry and cut outs for wiring.

The panel will be bonded to the chassis over the entire surface area with the prescribed film or paste adhesive.

S2 Glass Woven Roving – 814 gsm:

Minimum average weight [814]gsm, weave style plain, 1980 tex / 250 yield, impregnated with an epoxy resin.

Matrix System:

MTM 228 or a FIA approved substitute

S2 Glass Woven Roving – 812 gsm:

Minimum average weight [812]gsm, weave style plain, 600 tex, impregnated with an epoxy resin.

Matrix System:

E3 or a FIA approved substitute

Adhesive (to chassis):

Film adhesive 150gsm 3M AF163-2, paste adhesive 3M 9323 B/A, Huntsman Araldite® 420 A/B, Elantas Elan-tech® AS 89.1/AW 89.1 or a FIA approved substitute

Stacking Sequence (0 degree represents longitudinal axis of the chassis) :

- Outer surface.
- 11 plies S2 Glass
  (0/90, +/-45, 0/90, +/-45, 0/90, +/-45, 0/90, +/-45, 0/90, +/-45, 0/90)
- Inner surface

Thickness:

The minimum thickness of the cured panel, excluding the adhesive, shall be [7.3]mm.

Area Weight:

The minimum area weight of the cured panel, excluding the adhesive, shall be [13200]gsm.

Voids:

The panel shall be essentially void free.

Examples of Compliant Materials:

1. Supplied by Cytec:

   S2 Glass MTM228/PG001-32%RW

2. Supplied by Microtex:

   S2 Glass 81VP25E3-31%RW

15.4 Survival cell safety requirements:

15.4.1 The survival cell and the frontal impact-absorbing structure described in Article 15.3.5 must pass an impact test against a solid vertical barrier placed at right angles to the car centre line. Details of the test procedure may be found in Article 16.1.

15.4.2 An impact-absorbing structure must be fitted behind the gearbox symmetrically about the car centre line with its rearmost point between 650mm and 720mm behind the rear wheel centre line.

The rearmost face of the impact structure must be a rectangular section no less than 100mm wide, this minimum width must be maintained over a height of at least 130mm and each corner may incorporate a radius no greater than 10mm.

Except for fixation, the external cross section, in horizontal projection, forward of the rearmost face of the impact structure may not diminish.

The structure which was subjected to the test described in Article 18.5 must pass an impact test and be constructed from materials which will not be substantially affected by the temperatures it is likely to be subjected to during use. Details of this test procedure may be found in Article 16.2.

15.4.3 The survival cell must be subjected to three separate static side load tests:

1) in the cockpit area on a vertical plane passing through the centre of the seat belt lap strap fixing;

2) in the fuel tank area on a vertical plane passing through the centre of area of the fuel tank in side elevation;

3) on a vertical plane passing halfway between the front wheel axis and the top of the first rollover structure.

Details of the test procedures may be found in Article 18.2.

15.4.4 To test the attachments of the frontal and rear impact-absorbing structures, static side load tests must be carried out. Details of these test procedures may be found in Articles 18.3 and 18.5.

15.4.5 A calculation has to be provided, showing that the maximum acceptable load of inserts for front suspension pickup points behind the front wheel centre line is significantly higher than the maximum load of the corresponding suspension members.

15.4.6 A frontal anti-intrusion panel must be permanently attached to front face of the survival cell. No part of the panel may be less than 150mm in front of the front wheel centre line. For the sole purpose of increasing locally the thickness of the panel, the minimum distance to the front wheel centre line may be locally decreased to 130mm.
Cut-outs for mechanical installation may be add to the frontal anti-intrusion panel but must be kept to the necessary minimum.
The panel must pass the static load test as described in Article 18.8.

ARTICLE 16: IMPACT TESTING

16.1 Frontal test:

All parts which could materially affect the outcome of the test must be fitted to the test structure, which must be solidly fixed to the trolley through its Power Unit ~~engine~~ mounting points but not in such a way as to increase its impact resistance.

The fuel tank must be fitted and must be full of water.

A dummy weighing at least 75 kg must be fitted, with the safety belts described in Article 14.4 fastened. However, with the safety belts unfastened, the dummy must be able to move forwards freely in the cockpit.

The extinguishers, as described in Article 14.1, must also be fitted.

For the purposes of this test, the total weight of the trolley and test structure shall be 650 kg and the velocity of impact 12 metres/sec.

The resistance of the test structure must be such that during the impact:

a) the average deceleration over the first 150 mm of deformation does not exceed 5g;

b) the average deceleration of the trolley does not exceed 25g;

c) the peak deceleration in the chest of the dummy does not exceed 60g for more than 3ms.

Furthermore, there must be no damage to the survival cell or to the mountings of the safety belts or fire extinguishers.

This test must be carried out in the presence of an FIA technical delegate in an approved testing centre on the survival cell subjected to the tests described in Articles 17.1, 17.2, 18.2, 18.3, 18.4, 18.6 and 18.7, and on a frontal impact-absorbing structure identical to the one which was subjected to the test described in Article 18.3.

16.2 Rear test:

All parts which will be fitted behind the rear face of the Power Unit ~~engine~~ and which could materially affect the outcome of the test must be fitted to the test structure. If suspension members are to be mounted on the structure they must be fitted for the test. The structure and the gearbox must be solidly fixed to the ground and a solid object, having a mass of 560 kg and travelling at a velocity of 10 m/s, will be projected into it.

The object used for this test must be flat, measure 450 mm wide by 550 mm high and may have a 10 mm radius on all edges. Its lower edge must be at the same level as the car reference plane and must be so arranged to strike the structure vertically and at 90° to the car centre line.

During the test, the striking object may not pivot in any axis and the crash structure may be supported in any way, provided that this does not increase the impact resistance of the parts being tested.

The resistance of the test structure must be such that during the impact:

a) the peak deceleration over the first 225mm of deformation does not exceed 27g;

b) The maximum deceleration does not exceed 27g for more than a cumulative 15ms, this being measured only in the direction of impact.

Furthermore, all structural damage must be contained within the area behind the rear wheel centre line.

16.3 Steering column test:

For the purposes of this test, these parts must be fitted to a representative test structure; any other parts which could materially affect the outcome of the test must also be fitted. The test structure must be solidly fixed to the ground and a solid object, having a mass of 8 kg and travelling at a velocity of 7 m/s, will be projected into it.

The object used for this test must be hemispherical with a diameter of 165 mm.

For the test, the centre of the hemisphere must strike the structure at the centre of the steering wheel along the same axis as the main part of the steering column.

During the test the striking object may not pivot in any axis and the test structure may be supported in any way, provided that this does not increase the impact resistance of the parts being tested.

The resistance of the test structure must be such that during the impact the peak deceleration of the object does not exceed 80 g for more than 3 ms.

After the test, the steering wheel quick-release mechanism must still function normally.

ARTICLE 17: ROLL STRUCTURE TESTING

17.1 Principal roll structure test:

The principal roll structure shall be subjected to a static load test. A load equivalent to 13.2 kN laterally, 49.5 kN longitudinally in a rearward direction and 66 kN vertically, must be applied to the top of the structure through a rigid flat pad which is 200 mm in diameter and perpendicular to the loading axis.

During the test, the roll structure must be attached to the survival cell which is supported on its underside on a flat plate, fixed to it through its Power Unit ~~engine~~ mounting points and wedged laterally, but not in a way as to increase the resistance of the structure being tested.

Under the load, the deformation must be less than 50 mm measured along the loading axis, and any structural failure limited to 100 mm below the top of the roll structure when measured vertically.

This test must be carried out in the presence of an FIA technical delegate and using measuring equipment verified by the FIA.

17.2 Secondary roll structure test:

The secondary roll structure may be subjected to a static load test (see Article 15.2.3). A vertical load of 75 kN must be applied to the top of the structure using a rigid flat pad which is 100 mm in diameter and perpendicular to the loading axis.

Under the load, the deformation must be less than 50 mm measured along the loading axis, and any structural failure limited to 100 mm below the top of the roll structure when measured vertically.

Formula 4 cars homologated as from 01.01.2019:

17.2 Secondary roll structure test :

17.1.1 All tests must be carried out in the presence of an FIA technical delegate and by using measuring equipment which has been calibrated to the satisfaction of the FIA technical delegate.

17.2.2 The loads may be applied using a 150mm diameter pad or through a spherical joint whose centre lies in the specified loading position.

Rubber 3mm thick may be used between the load pads and the roll structure.

17.2.3 For each test, peak loads must be applied in less than three minutes and be maintained for five seconds.

17.2.4 After five seconds of application there must be no failure of any part of the survival cell or of any attachment between the structure and the survival cell.

17.2.5 A load equivalent to 116kN vertically downward and 46kN longitudinally rearward must be applied at a position 785mm forward of the rear face of the cockpit entry template and 810mm above the reference plane and positioned on the car centre plane.

During the test, the structure must be attached to the survival cell which is supported on its underside on a flat plate, fixed to it through its Power Unit ~~engine~~ mounting points.

17.2.6 A load equivalent to 93kN laterally inward and 83kN longitudinally rearward must be applied at a position 590mm forward of the rear face of the cockpit entry template and 790mm above the reference plane to the outer surface of the structure.

During the test, the survival cell may be supported in any way provided this does not increase the strength of the attachments being tested.

17.2.7 A load of 150kN vertically upward must be applied simultaneously on the two forward fasteners of the rear attachment on the side which was determined by the FIA technical delegate.

The load must be applied through fasteners identical to the ones used for the secondary roll structure. A dummy rear attachment may be used.

Alternatively a load of 75 kN may be applied separately on each of the two forward fasteners.

During the test, the survival cell may be supported in any way provided this does not increase the strength of the attachments being tested.

17.2.8 A load equivalent to 88kN vertically upward and 88kN longitudinally rearward must be applied on the axis of the front attachment.

The load must be applied through structure and fasteners identical to the ones used for the secondary roll structure.

During the test, the survival cell may be supported in any way provided this does not increase the strength of the attachments being tested.

ARTICLE 18: STATIC LOAD TESTING

18.1 Conditions applicable to all static load tests:

18.1.1 The static load tests in Articles 18.2, 18.3, 18.4, 18.5, 18.6 and 18.7 must be carried out in the presence of an FIA technical delegate and using measuring equipment verified by the FIA.

Any significant modification introduced into any of the structures tested shall require that part to undergo a further test.

18.1.2 In order to ensure that all survival cells are manufactured in the same way, each constructor must submit the weight of every survival cell produced. These weights will be compared with that of the survival cell which was subjected to the tests in Articles 18.2, 18.3, 18.4, 18.6 and 18.7. If any survival cell weighs less than 95% of the one previously tested, it will then have to be subjected to the tests above.

The FIA reserves the right to carry out the static load tests in Articles 17.1, 18.2, 18.3, 18.4, 18.6 and 18.7 at random on any other chassis produced by the manufacturer.

These tests will be carried out with 80% of the load referred to in these Articles and during these tests the deflection of the reference chassis may not be exceeded by more than 20%.

18.2 Survival cell side tests:

For the tests described in Article 15.4.3, a pad 100 mm long and 300 mm high, with a maximum radius on all edges of 3 mm and conforming to the shape of the survival cell, shall be placed against the outermost sides of the survival cell with the lower edge of the pad at the lowest part of the survival cell at that section. Rubber 3 mm thick may be used between the pads and the survival cell.

A constant transverse horizontal load of 20 kN shall be applied, in less than 3 minutes, to the pads at their centre of area through a ball-jointed junction, and maintained for a minimum of 30 seconds.

Under these load conditions, there shall be no structural failure of the inner or outer surfaces of the survival cell and permanent deformation must be less than 1 mm after the load has been released for 1 minute. The deformation will be measured at the top of the pads across the inner surfaces. In test 1, deflection across the inner surfaces of the survival cell must not exceed 20 mm.

18.3 Nose push off test:

To test the attachments of the frontal impact-absorbing structure to the survival cell, a static side load test shall be performed on a vertical plane passing 400 mm in front of the front wheel axis.

A constant transversal horizontal load of 30 kN must be applied to one side of the impact-absorbing structure using a pad identical to the one used in the lateral tests in Article 18.2. The centre of area of the pad must pass through the plane mentioned above and the mid-point of the height of the structure at that section.

After 30 seconds of application, there must be no failure of the structure or of any attachment between the structure and the survival cell.

During the test, the survival cell must be resting on a flat plate and secured to it solidly but not in a way that could increase the strength of the attachments being tested.

18.4 Side intrusion test:

18.4.1 The test must be carried out in accordance with FIA Test Procedure 02/00, in the presence of an FIA technical delegate and using measuring equipment which has been calibrated to the satisfaction of the FIA technical delegate.

18.4.2 The test panel must be 500 mm x 500 mm and will be tested by forcing a rigid truncated cone through the centre of the panel at a rate of 2 mm (± 1 mm) per second until the displacement exceeds 150 mm.

During the first 100 mm of displacement, the load must exceed 150 kN and the energy absorption must exceed 6000 J. There must be no damage to the fixture or border before these requirements have been met.

18.5 Rear impact structure push off test:

To test the attachments of the rear impact structure to the gearbox, a static side load test shall be performed. During the test the gearbox and the structure must be solidly fixed to the ground but not in a way that could increase the strength of the attachments being tested.

A constant transversal horizontal load of 30 kN must then be applied to one side of the impact-absorbing structure, using a pad identical to the ones used in the lateral tests in Article 18.2, at a point 470 mm behind the rear wheel centre line.

The centre of area of the pad must pass through the plane mentioned above and the mid-point of the height of the structure at the relevant section. After 30 seconds of application, there must be no failure of the structure or of any attachment between the structure and the gearbox.

18.6 Fuel tank floor test:

A further static load test must be carried out on the survival cell from beneath the fuel tank. A pad 200 mm in diameter must be placed in the centre of area of the fuel tank and a vertical upwards load of 10 kN applied in less than 3 minutes through a ball-jointed junction. The load must be maintained for a minimum of 30 seconds.

Under these load conditions, there must be no structural failure of the inner or outer surfaces of the survival cell and permanent deformation must be less than 0.5 mm after the load has been released for 1 minute, the measurement being taken at the centre of area of the pad.

18.7 Cockpit rim test:

A further static load test must be carried out on the survival cell. Two pads, each of which is 100 mm in diameter, must be placed on both sides of the cockpit rim with their upper edges at the same height as the top of the cockpit side and with their centres at a point 250 mm forward of the rear edge of the cockpit entry template longitudinally. A constant transverse horizontal load of 15 kN will then be applied at 90° to the car centre line, in less than 3 minutes, through a ball-jointed junction. The load must be maintained for a minimum of 30 seconds.

Under the load, there must be no structural failure of the inner or outer surfaces of the survival cell and the total deflection must not exceed 20 mm. The permanent deformation must be less than 1.0 mm after the load has been released for 1 minute, the measurements being taken at the centre of area of the pad.

18.8 Frontal anti-intrusion panel test:

During the test, the panel must be attached to the survival cell. For the purpose of this test, a section of the survival cell from minimum the highest point of the secondary roll structure to the front end may be used.

The secondary side intrusion panel according to Article 15.3.8 may be fitted to the survival cell during the test. Mechanical components may be fitted to the front face of the survival cell and the frontal anti-intrusion panel during the test.

The load will be applied through a rigid impactor, 100mm wide and 130mm high. The cross section must remain constant over at least 150mm longitudinally. Each corner of the impactor may incorporate a radius no greater than 10mm.

Rubber 3 mm thick may be used between the impactor and the frontal anti-intrusion panel.

A constant longitudinal, rearward and horizontal load of 200 kN shall be applied, in less than 3 minutes, to the centre of area of the front face of the survival, through a ball-jointed junction, and maintained for a minimum of 10 seconds.

During the test, the deflection must be less than 50.0 mm, the measurements being taken at the centre of area of the impactor. In addition, during the test, no part of the frontal anti-intrusion panel may be less than 100 mm in front of the front wheel centre line.

ARTICLE 19 : FUEL

19.1 Fuel :

The fuel must comply with ISC Appendix J Article 252.9.1.

19.2 Air :

Only air may be mixed with the fuel as an oxidant.

ARTICLE 20: FINAL TEXT

The final text for these regulations shall be the English version, which will be used should any dispute arise over their interpretation.

Headings and typeface in this document are for ease of reference only and do not form part of these Technical Regulations.

APPENDIX 1

CHASSIS-RELATED DRAWINGS

Points for aerofoil section number 1, all dimensions are in millimetres (see Drawing 1.3):

1	00.00	00.00	**14**	-151.58	07.65	**27**	-263.58	-27.64	**40**	-112.41	-33.36
2	-11.40	-02.79	**15**	-163.33	07.59	**28**	-252.44	-31.35	**41**	-100.87	-31.19
3	-23.08	-03.94	**16**	-175.07	07.36	**29**	-241.00	-33.96	**42**	-89.38	-28.77
4	-34.82	-03.88	**17**	-186.80	06.95	**30**	-229.40	-35.82	**43**	-77.95	-26.11
5	-46.54	-03.20	**18**	-198.53	06.31	**31**	-217.73	-37.06	**44**	-66.56	-23.24
6	-58.22	-02.03	**19**	-210.24	05.41	**32**	-206.02	-37.97	**45**	-55.22	-20.18
7	-69.86	-00.49	**20**	-221.92	04.28	**33**	-194.29	-38.58	**46**	-43.94	-16.93
8	-81.48	01.20	**21**	-233.58	02.86	**34**	-182.55	-38.85	**47**	-32.72	-13.46
9	-93.11	02.85	**22**	-245.17	00.96	**35**	-170.81	-38.78	**48**	-21.59	-09.71
10	-104.76	04.36	**23**	-256.66	-01.45	**36**	-159.07	-38.43	**49**	-10.54	-05.75
11	-116.43	05.67	**24**	-267.93	-04.72	**37**	-147.35	-37.77	**50**	00.43	-01.54
12	-128.12	06.72	**25**	-277.16	-11.42	**38**	-135.66	-36.71			
13	-139.84	07.40	**26**	-273.74	-21.83	**39**	-124.01	-35.22			

Points for aerofoil section number 2, all dimensions are in millimetres (see Drawing 1.4):

1	00.00	00.00	**14**	-129.20	-20.46	**27**	-222.52	-42.50	**40**	-92.00	-43.84
2	-08.62	-05.50	**15**	-139.42	-19.80	**28**	-212.92	-46.08	**41**	-82.28	-40.62
3	-18.00	-09.56	**16**	-149.64	-19.16	**29**	-203.06	-48.82	**42**	-72.68	-37.10
4	-27.80	-12.48	**17**	-159.86	-18.56	**30**	-193.06	-50.94	**43**	-63.14	-33.36
5	-37.72	-15.06	**18**	-170.08	-18.08	**31**	-182.94	-52.50	**44**	-53.70	-29.42
6	-47.70	-17.32	**19**	-180.30	-17.76	**32**	-172.76	-53.54	**45**	-44.34	-25.26
7	-57.76	-19.20	**20**	-190.54	-17.68	**33**	-162.54	-54.12	**46**	-35.08	-20.92
8	-67.88	-20.64	**21**	-200.78	-17.90	**34**	-152.30	-54.20	**47**	-25.90	-16.38
9	-78.08	-21.58	**22**	-211.00	-18.46	**35**	-142.08	-53.76	**48**	-16.86	-11.60
10	-88.30	-22.04	**23**	-221.16	-19.66	**36**	-131.90	-52.80	**49**	-07.98	-06.52
11	-98.54	-22.04	**24**	-231.02	-22.34	**37**	-121.76	-51.28	**50**	00.70	-01.08
12	-108.76	-21.66	**25**	-237.22	-29.56	**38**	-111.74	-49.26			
13	-118.98	-21.10	**26**	-231.48	-37.60	**39**	-101.82	-46.76			

Points for aerofoil section number 3, all dimensions are in millimetres (see Drawing 1.5):

1	163.07	00.00	**21**	59.33	-40.21	**41**	01.91	-17.91	**61**	113.59	-01.70
2	164.08	-01.19	**22**	53.95	-40.11	**42**	03.45	-16.76	**62**	120.07	-02.33
3	160.86	-03.91	**23**	48.67	-39.85	**43**	06.86	-15.04	**63**	126.34	-03.02
4	157.66	-06.63	**24**	43.43	-39.45	**44**	10.31	-13.39	**64**	132.59	-03.78
5	154.56	-09.14	**25**	38.20	-38.81	**45**	15.32	-11.20	**65**	137.90	-04.47
6	151.54	-11.46	**26**	33.00	-37.95	**46**	20.42	-09.22	**66**	143.20	-05.18
7	147.47	-14.30	**27**	27.53	-36.78	**47**	24.00	-07.95	**67**	147.47	-05.77
8	143.26	-16.99	**28**	22.17	-35.38	**48**	27.58	-06.81	**68**	151.77	-06.38
9	138.86	-19.56	**29**	17.32	-33.86	**49**	33.35	-05.18	**69**	151.94	-06.40
10	134.26	-22.02	**30**	12.55	-32.16	**50**	39.14	-03.73	**70**	152.12	-06.42
11	128.27	-24.94	**31**	09.50	-30.96	**51**	46.86	-02.21	**71**	153.01	-06.50
12	122.10	-27.69	**32**	06.55	-29.69	**52**	54.64	-01.12	**72**	153.90	-06.43
13	116.76	-29.79	**33**	05.08	-29.03	**53**	60.71	-00.53	**73**	154.76	-06.25
14	111.38	-31.70	**34**	03.71	-28.40	**54**	66.80	-00.20	**74**	155.60	-05.94
15	103.48	-34.11	**35**	02.34	-27.51	**55**	73.18	-00.03	**75**	156.39	-05.51
16	95.48	-36.22	**36**	01.22	-26.29	**56**	79.55	00.00	**76**	157.12	-05.00
17	87.17	-37.92	**37**	00.43	-24.82	**57**	86.31	-00.10	**77**	163.07	00.00
18	78.77	-39.12	**38**	00.05	-23.22	**58**	93.09	-00.33			
19	71.75	-39.78	**39**	00.13	-21.29	**59**	100.10	-00.66			
20	64.72	-40.13	**40**	00.76	-19.48	**60**	107.16	-01.14			

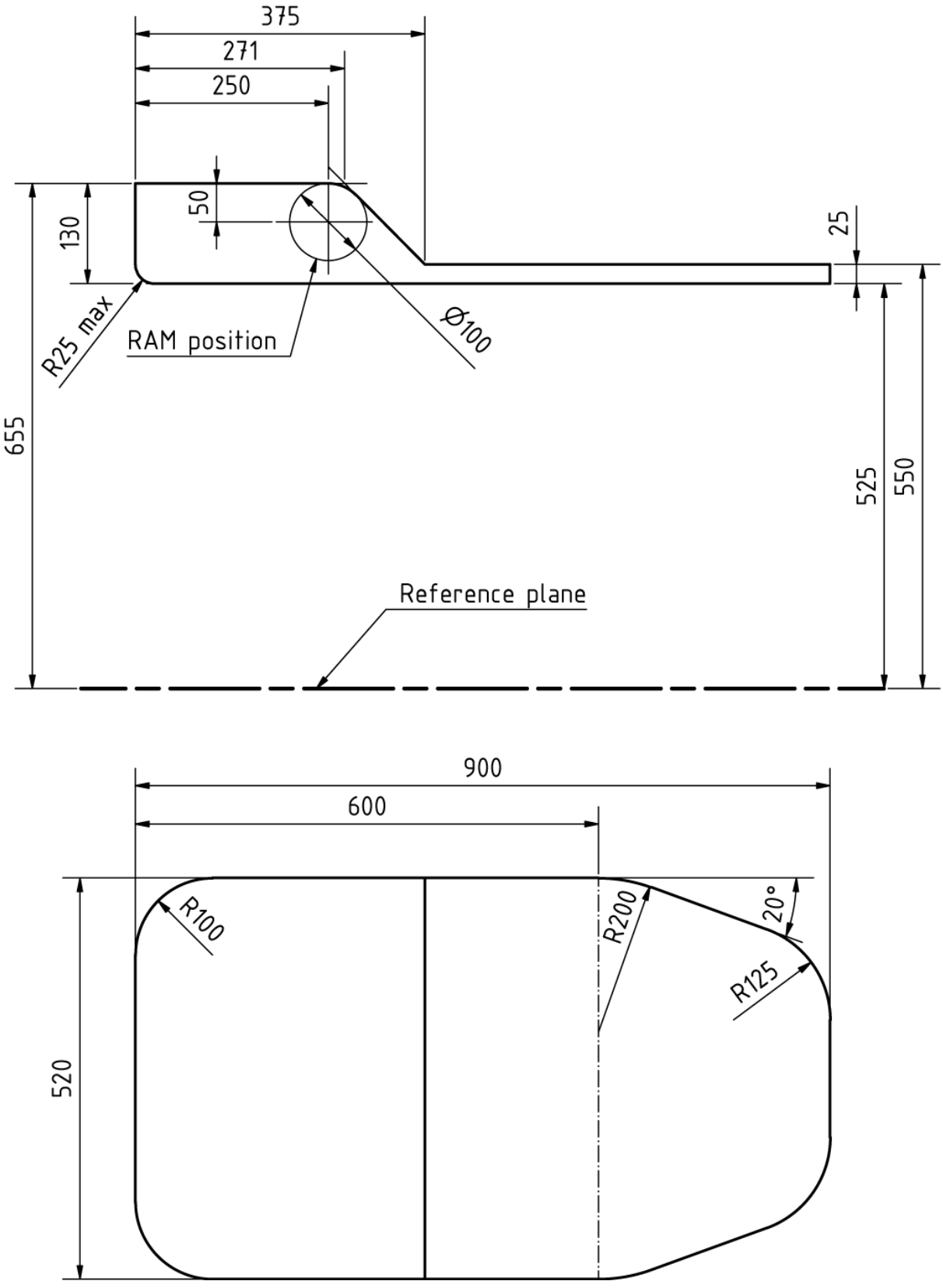
375
271
250
50
130
25
655
525
550
R25 max
RAM position
Ø100
Reference plane
900
600
520
R100
R200
20°
R125

Drawing 1.1

Formula 4 cars homologated as from 01.01.2019:

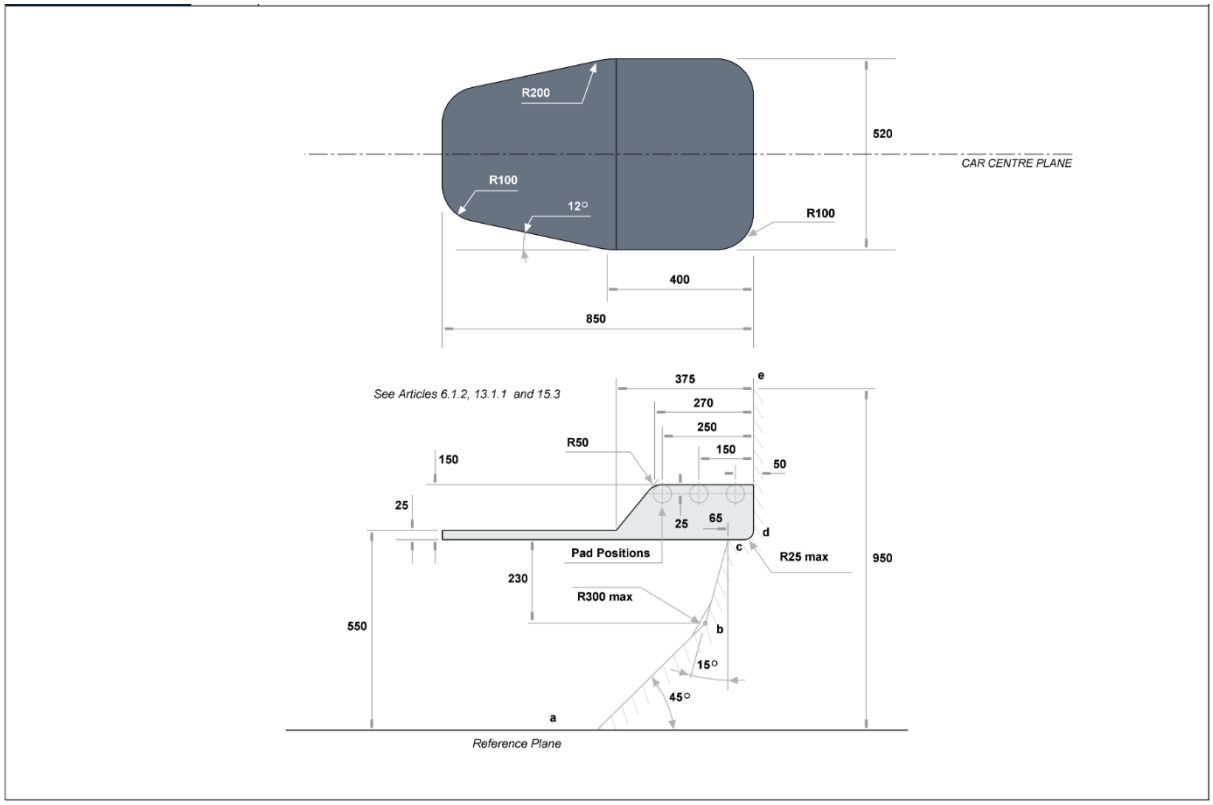

Drawing 1.1

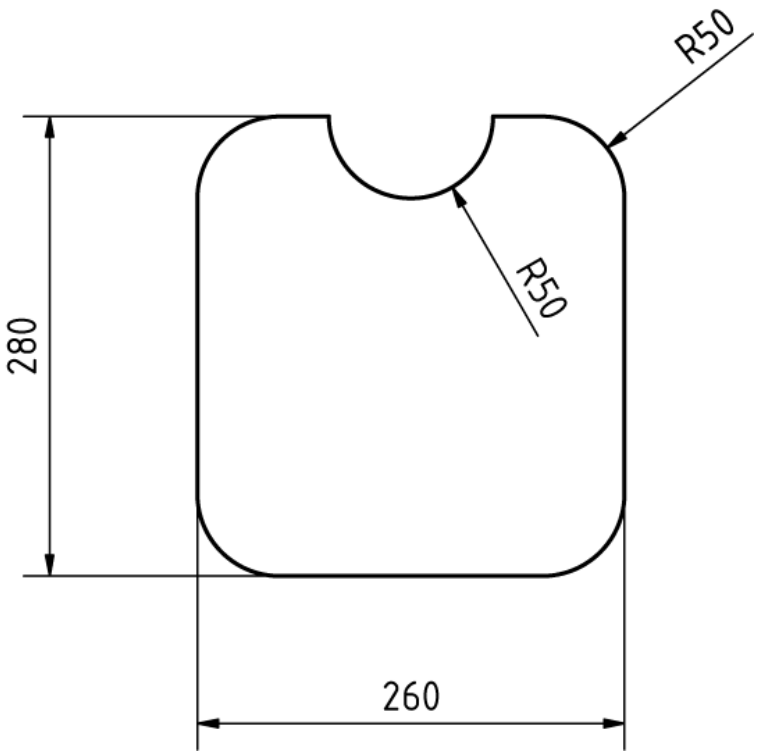

Drawing 1.2

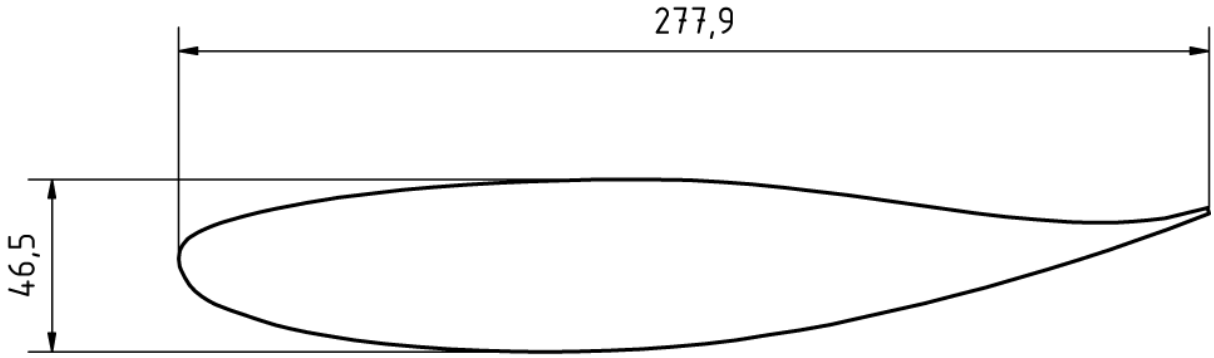

Drawing 1.3

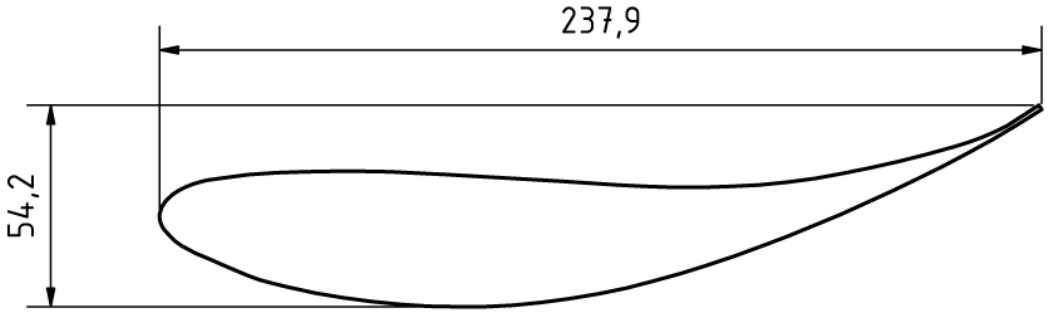

Drawing 1.4

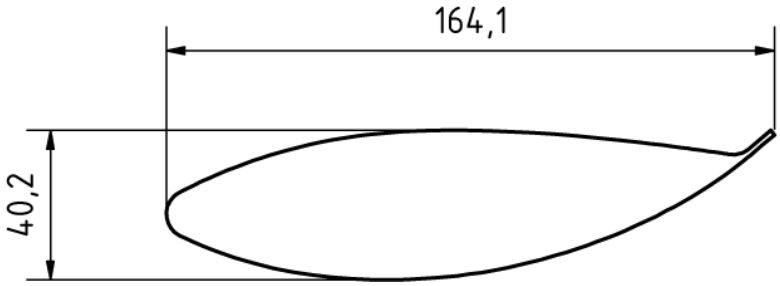

Drawing 1.5

Drawing 6 Skid Block Dimensions

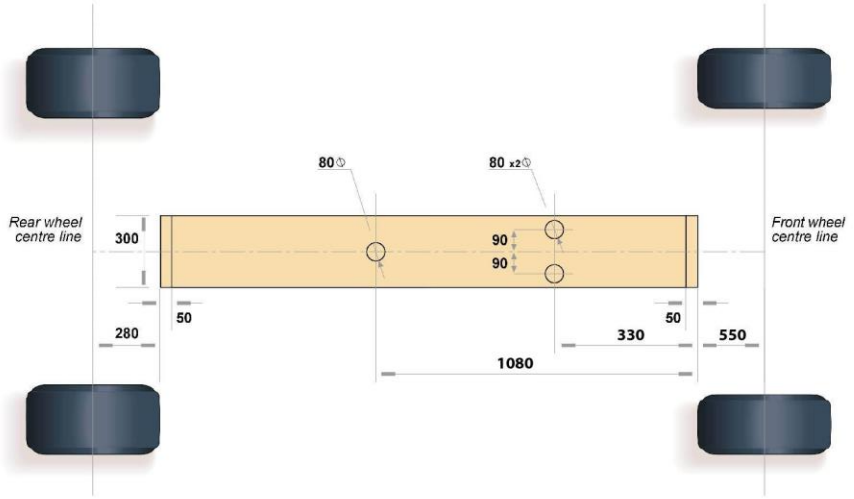

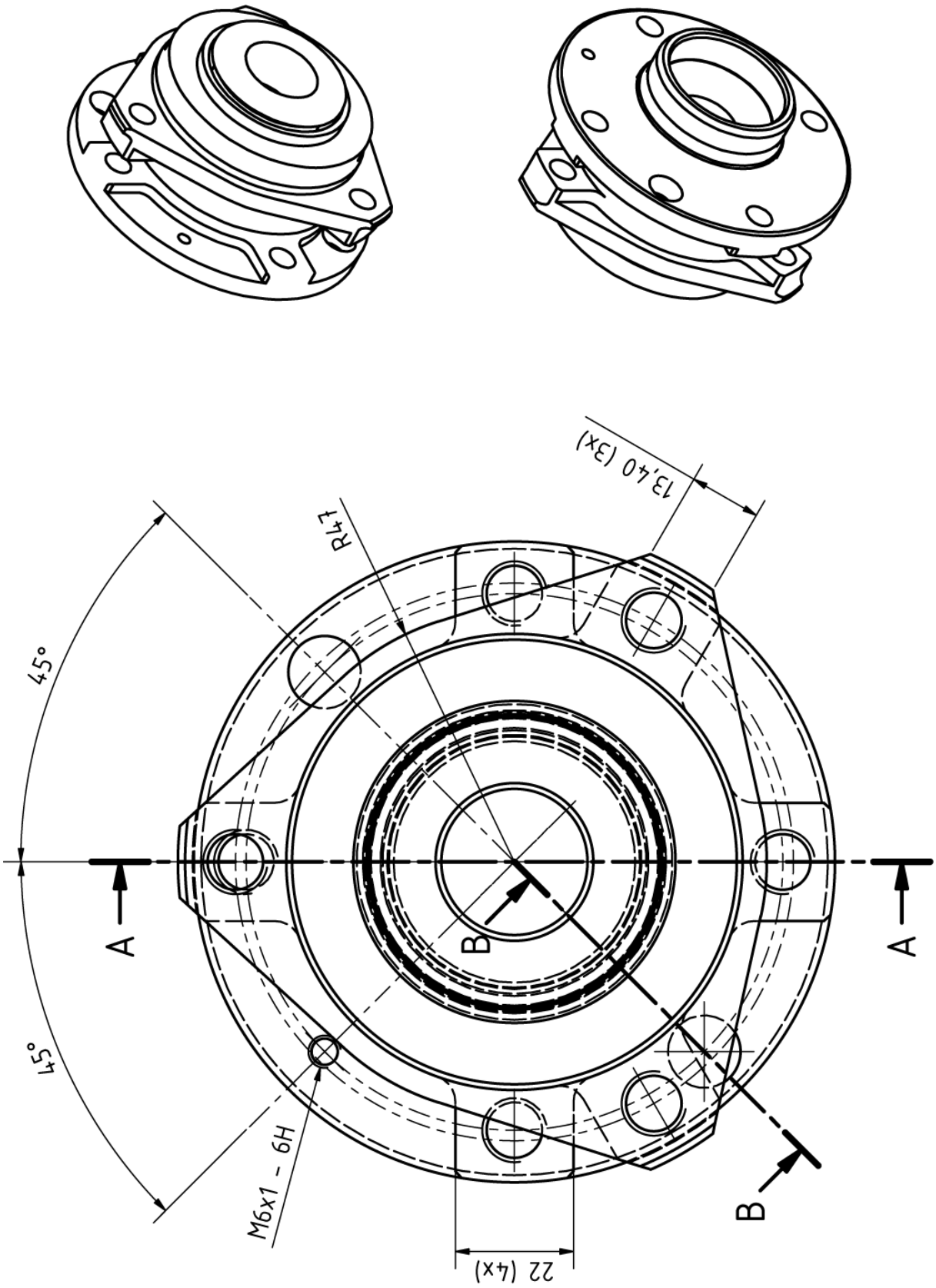

Drawing 1.7a

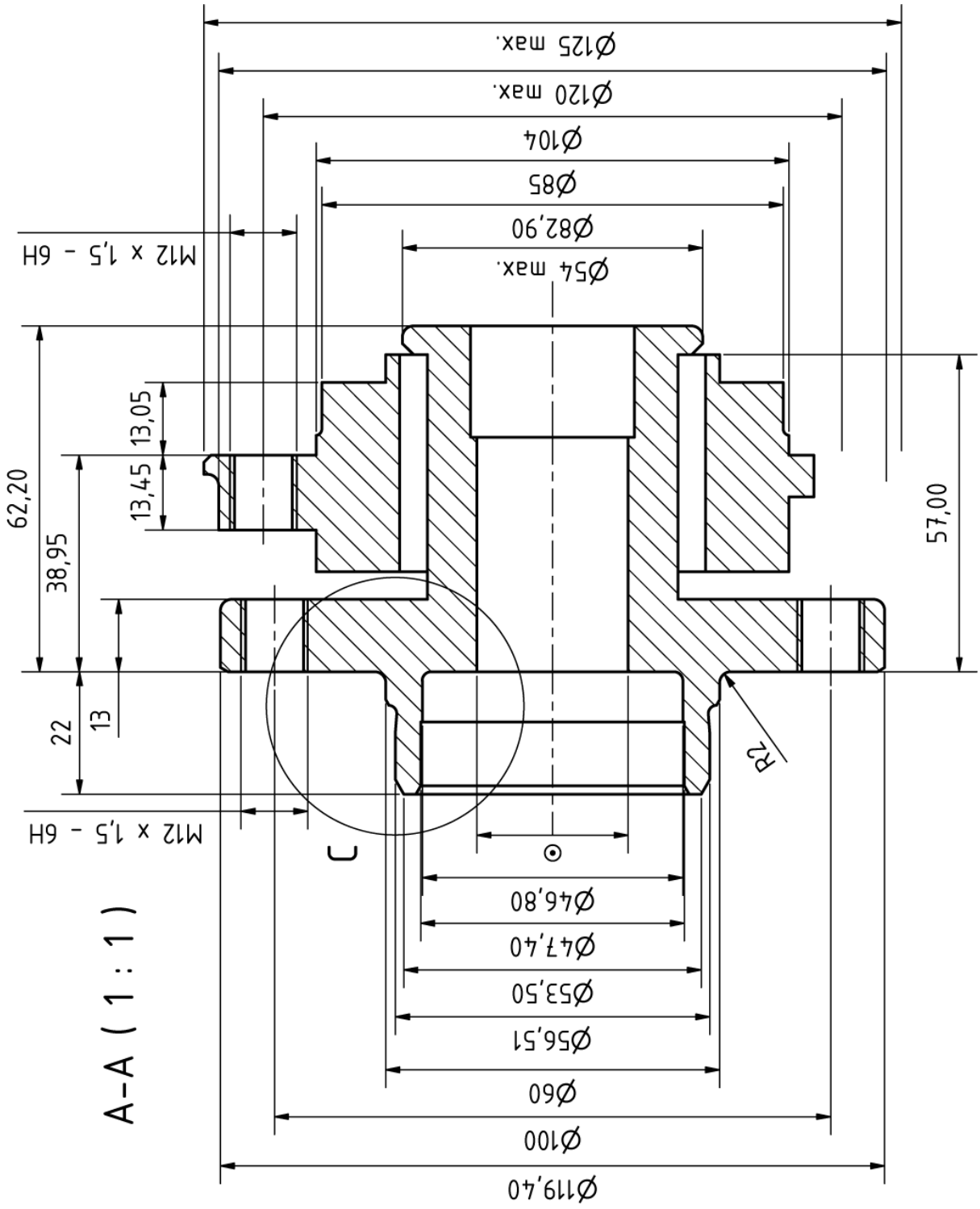
Ø125 max.
Ø120 max.
Ø104
Ø85
Ø82,90
Ø54 max.
M12 x 1,5 - 6H
13,05
13,45
62,20
38,95
57,00
22
13
R2
M12 x 1,5 - 6H
C
A-A (1 : 1)
Ø46,80
Ø47,40
Ø53,50
Ø56,51
Ø60
Ø100
Ø119,40

Drawing 1.7b

⊙ INVOLUTE SPLINE ANSI 32/64 B92.1 – 1970 pag. 21

Number of teeth	33
Reference diameter	26,194
Normal module	0,79375
Helix angle	0°
Hand of helix	Straight
Lead	∞
Root diameter	27,94
Base radius	11,342

B-B (1 : 1)

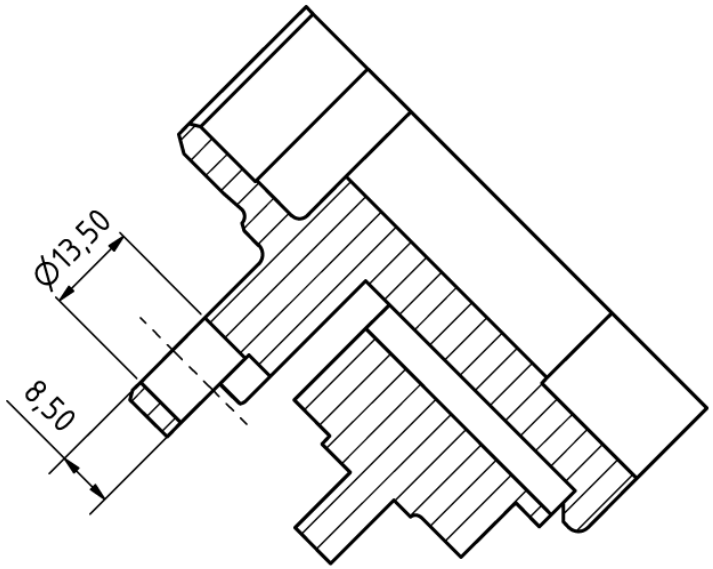

C (2 : 1)

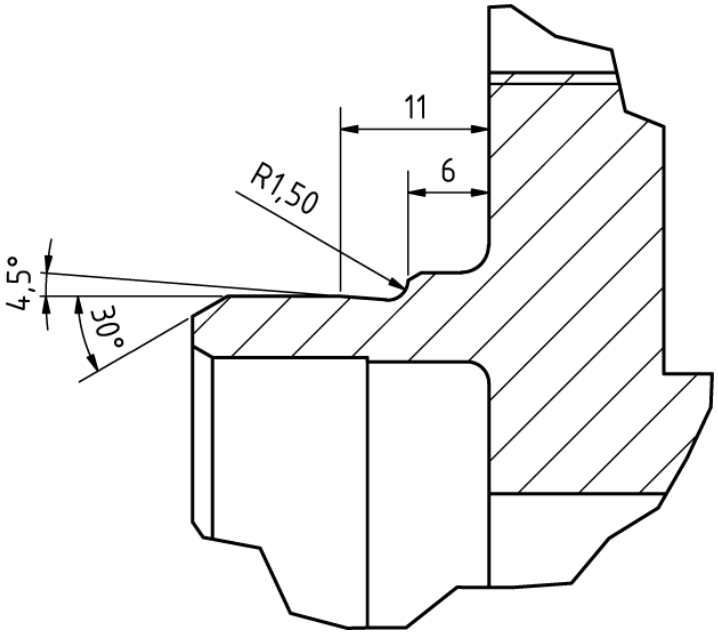

Drawing 1.7c

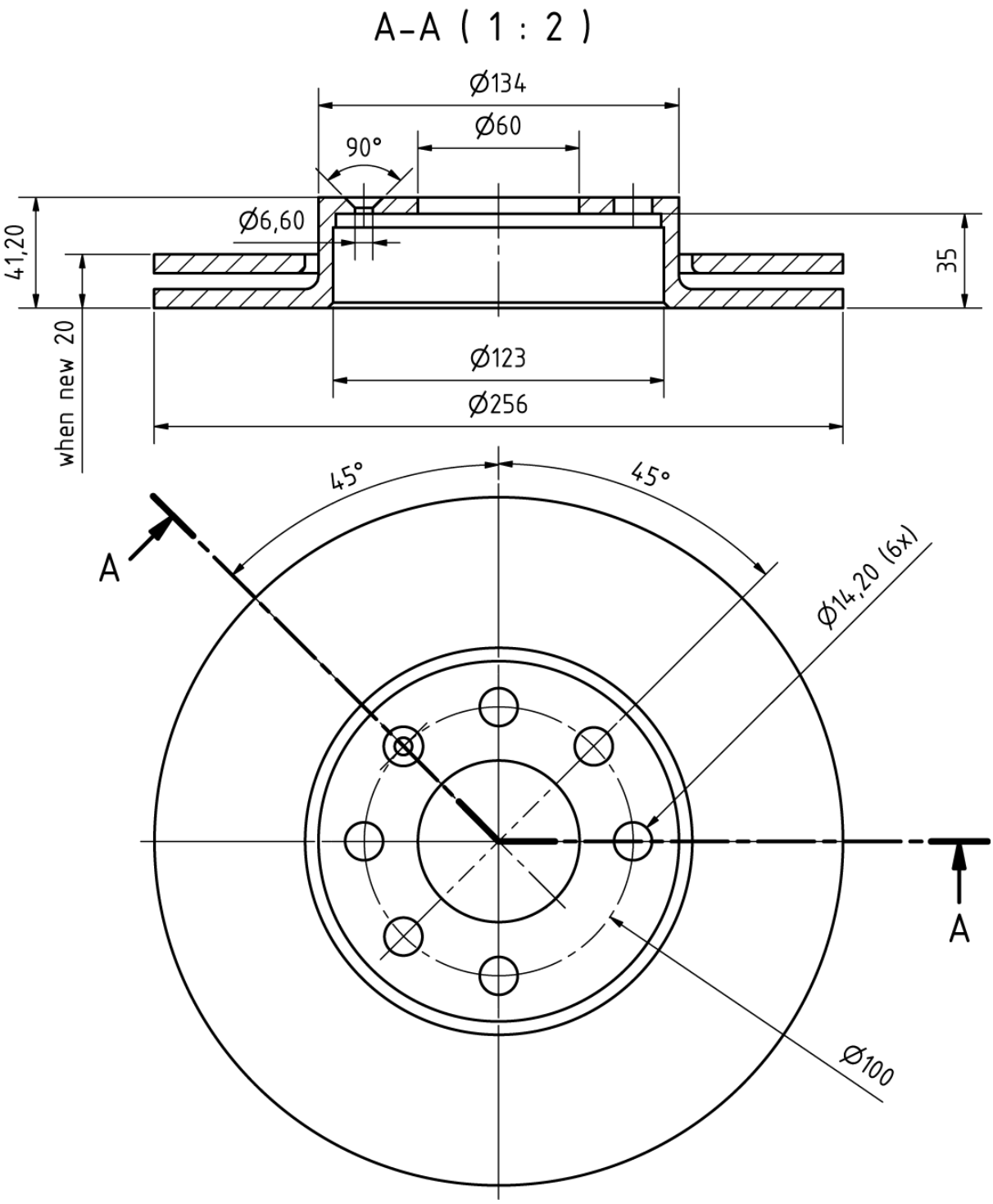
A-A (1 : 2)
Ø134
Ø60
90°
Ø6,60
41,20
35
when new 20
Ø123
Ø256
45°
45°
A
Ø14,20 (6x)
A
Ø100

Drawing 1.8

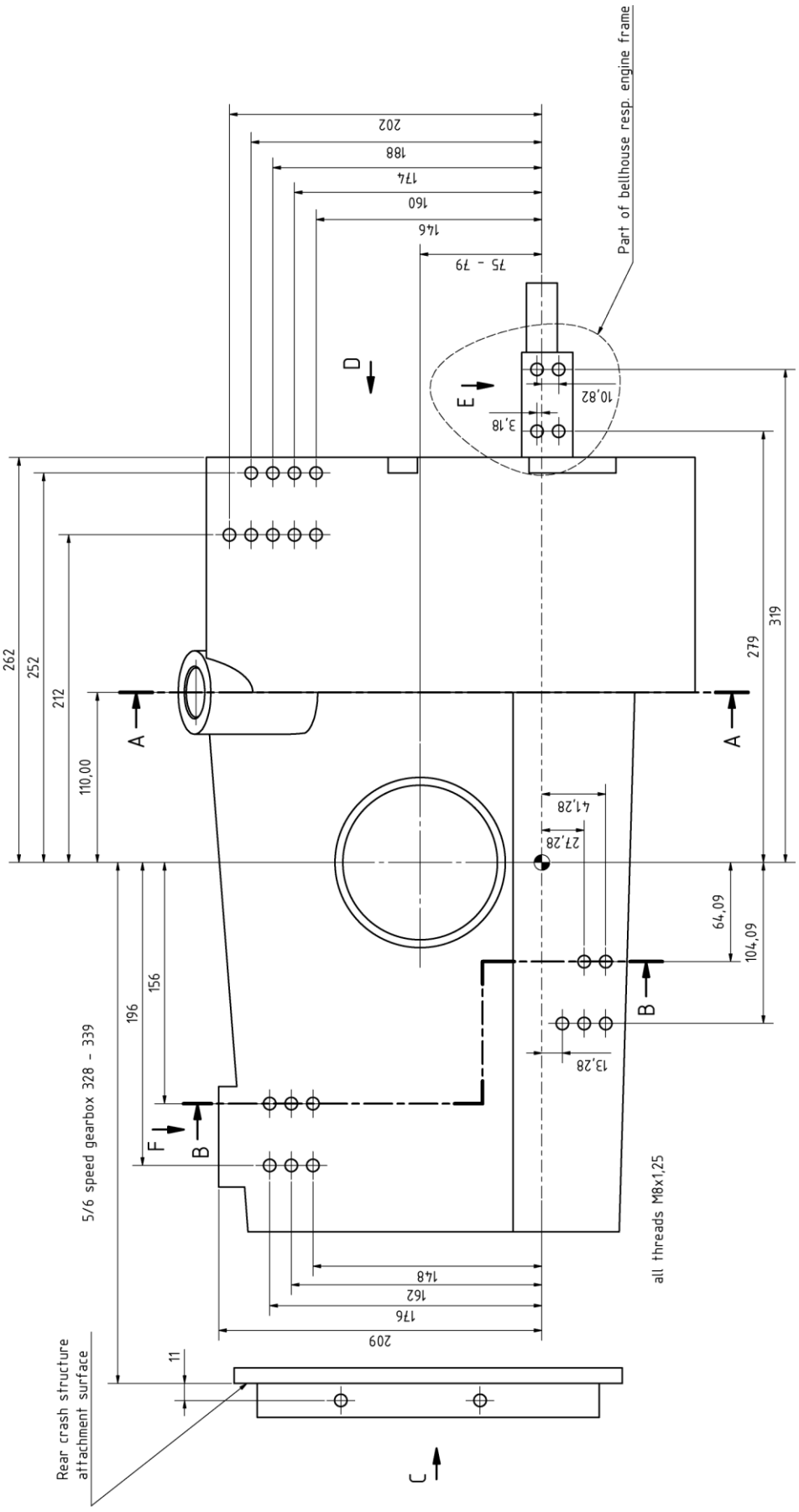
Part of bellhouse resp. engine frame
202
188
174
160
146
75 - 79
D
E
10,82
3,18
262
252
212
110,00
279
319
A
A
41,28
27,28
64,09
104,09
B
13,28
196
156
5/6 speed gearbox 328 - 339
F
B
all threads M8x1,25
148
162
176
209
11
Rear crash structure
attachment surface
C

Drawing 1.9a

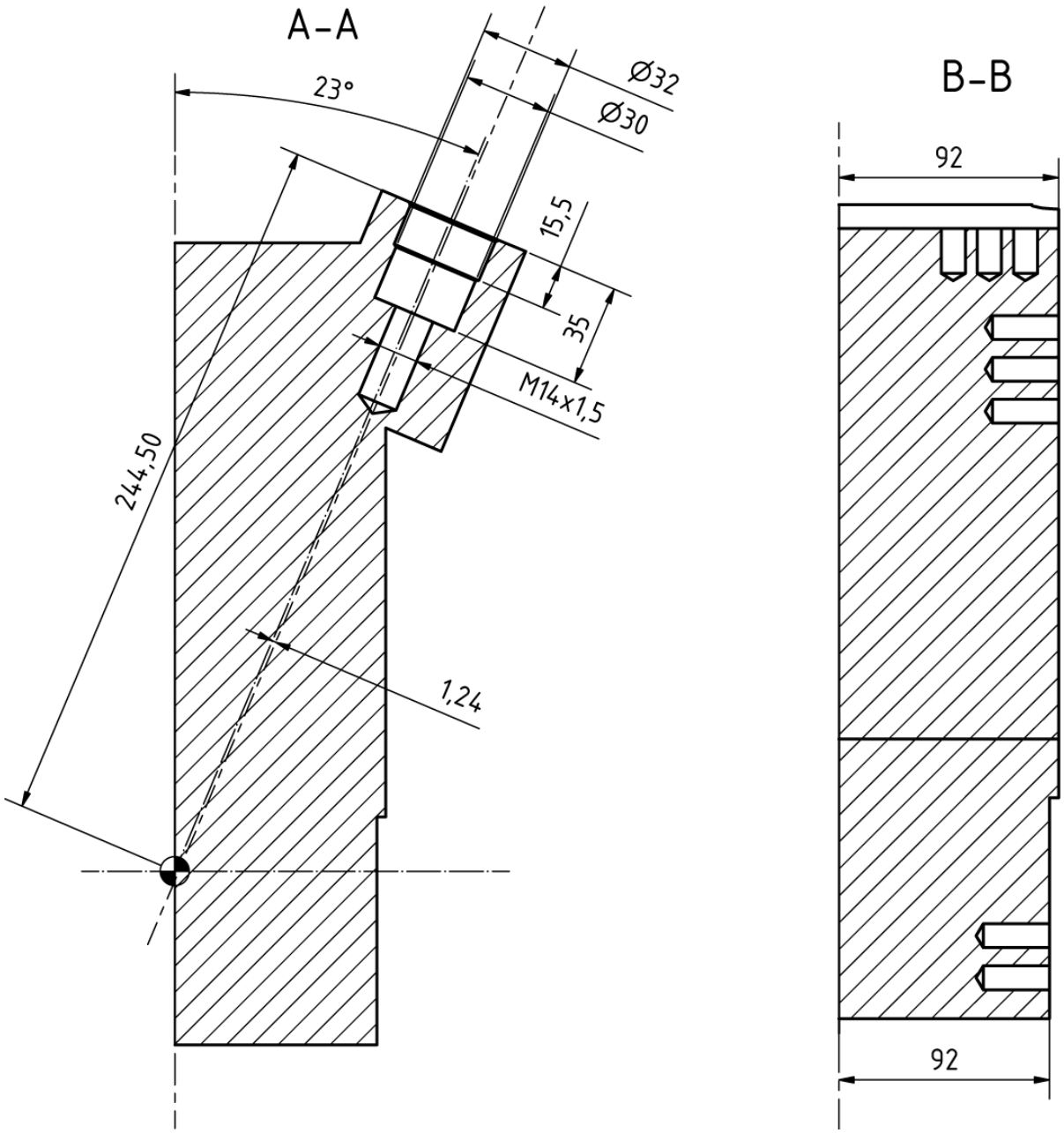

Drawing 1.9b

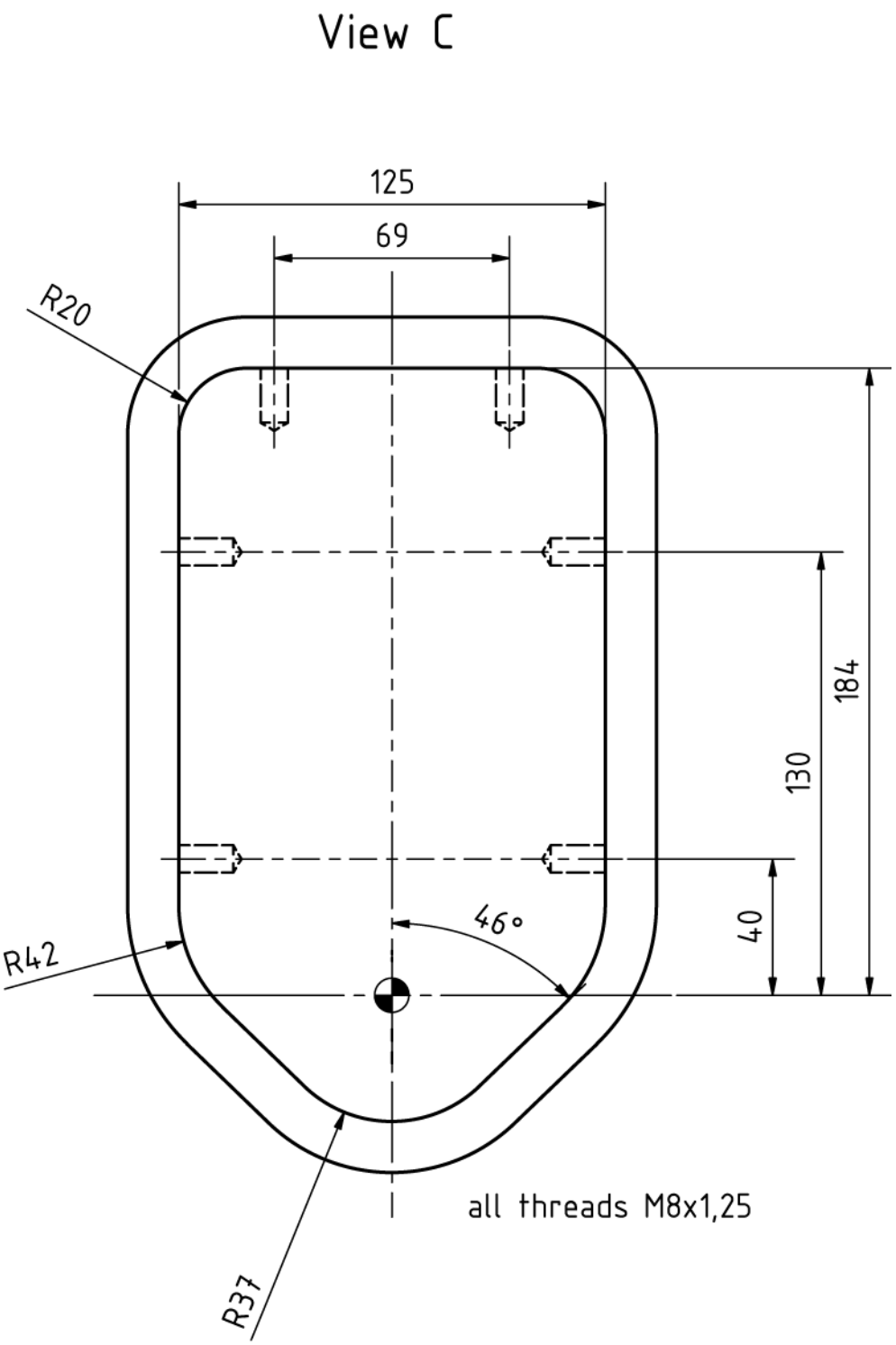

The two upper points are optional for the attachment of a towing device.
If these do not exist, different points for a rear towing device need to be available.

Drawing 1.9c

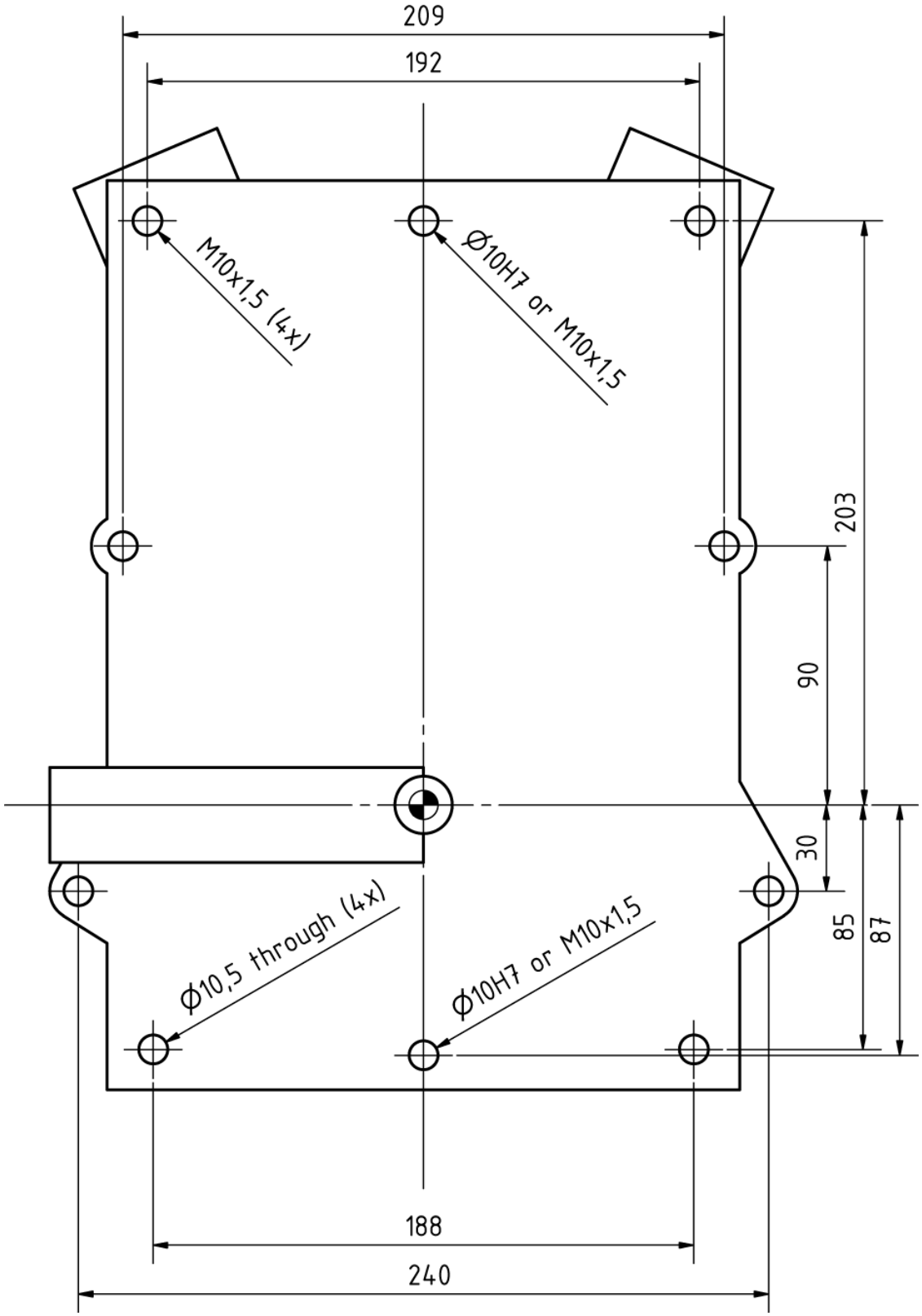
View D
209
192
M10x1,5 (4x)
Ø10H7 or M10x1,5
203
90
30
85
87
ϕ10,5 through (4x)
ϕ10H7 or M10x1,5
188
240

Drawing 1.9d

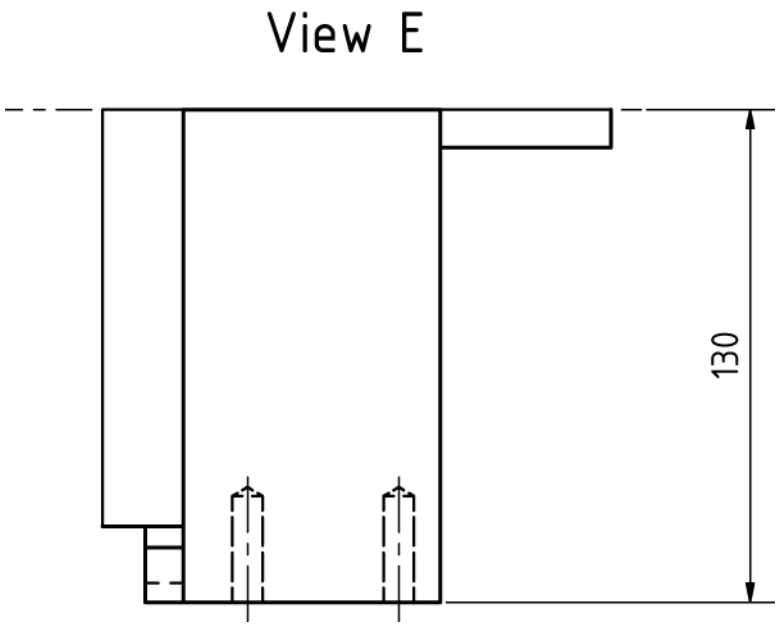

Drawing 1.9e

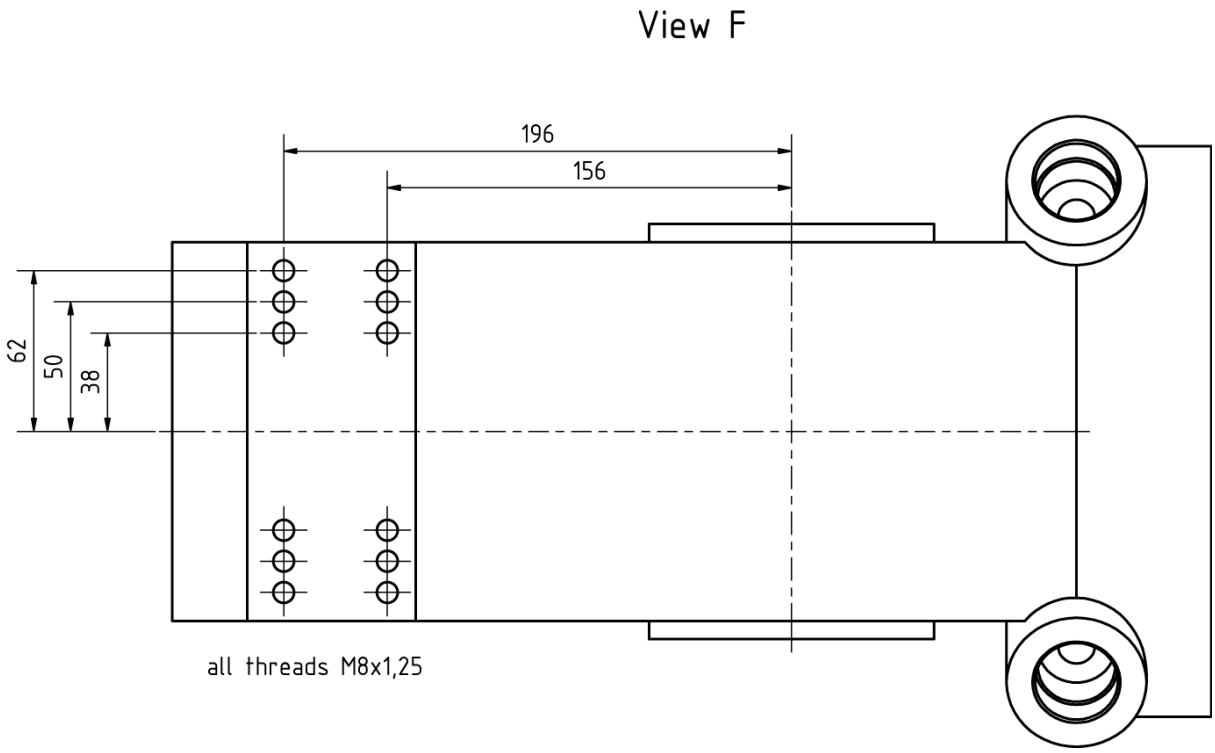

Drawing 1.9f

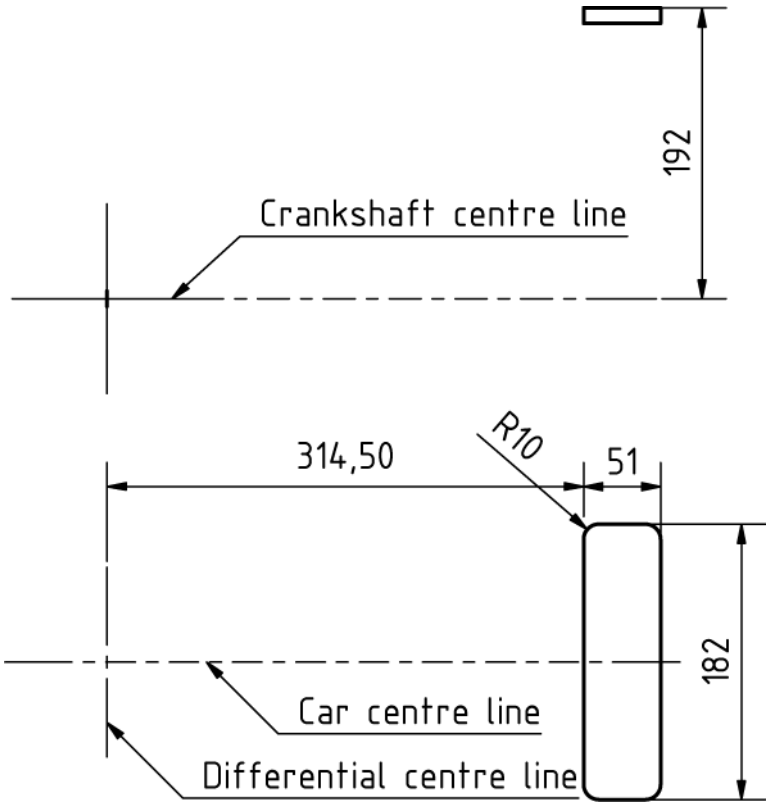
192
Crankshaft centre line
314,50
R10
51
182
Car centre line
Differential centre line

Drawing 1.10

APPENDIX 2

POWER UNIT ~~ENGINE~~-RELATED DRAWINGS

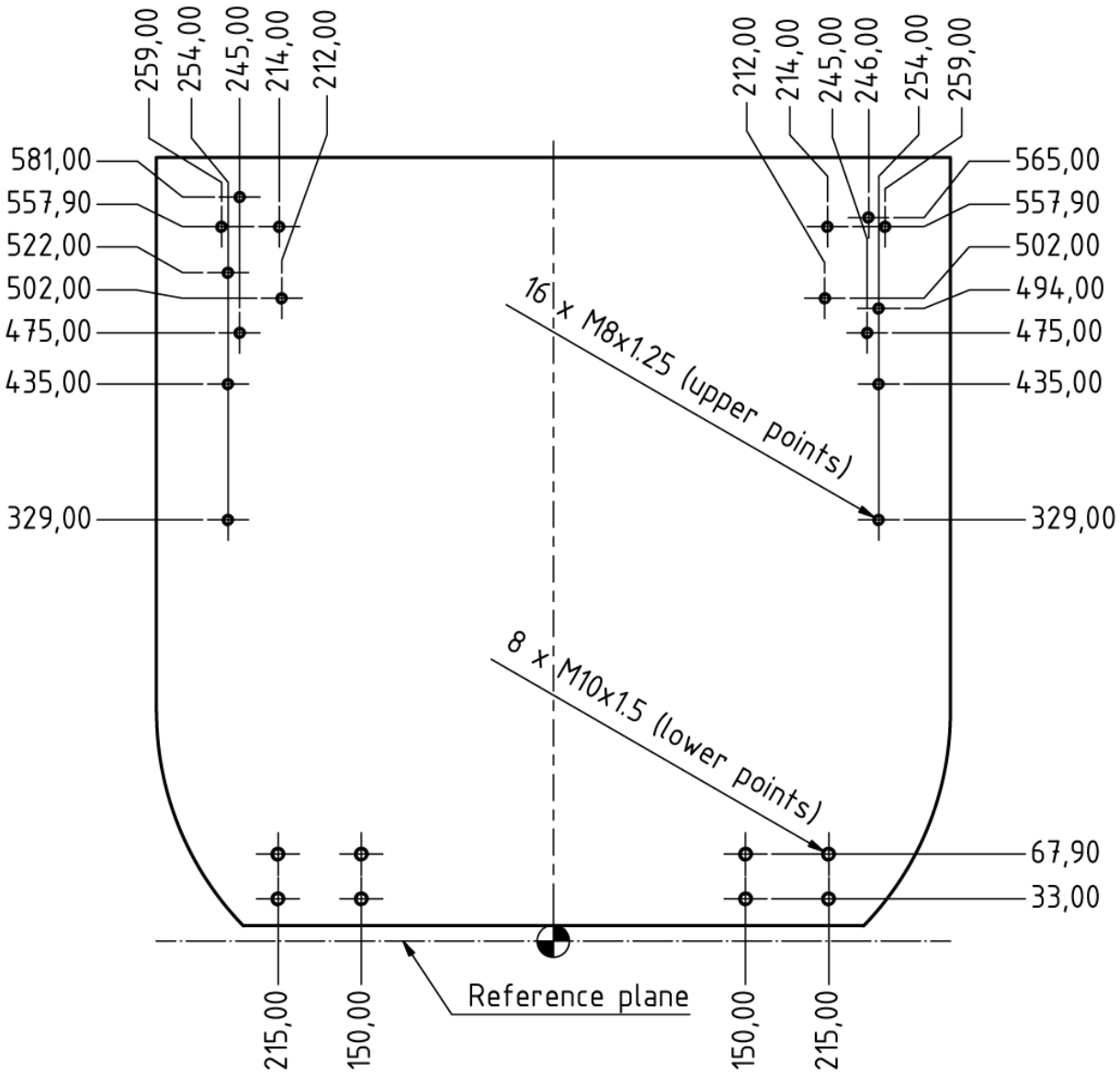
259,00
254,00
245,00
214,00
212,00
212,00
214,00
245,00
246,00
254,00
259,00
581,00
557,90
522,00
502,00
475,00
435,00
329,00
565,00
557,90
502,00
494,00
475,00
435,00
329,00
16 x M8x1.25 (upper points)
8 x M10x1.5 (lower points)
67,90
33,00
Reference plane
215,00
150,00
150,00
215,00

Drawing 2.1

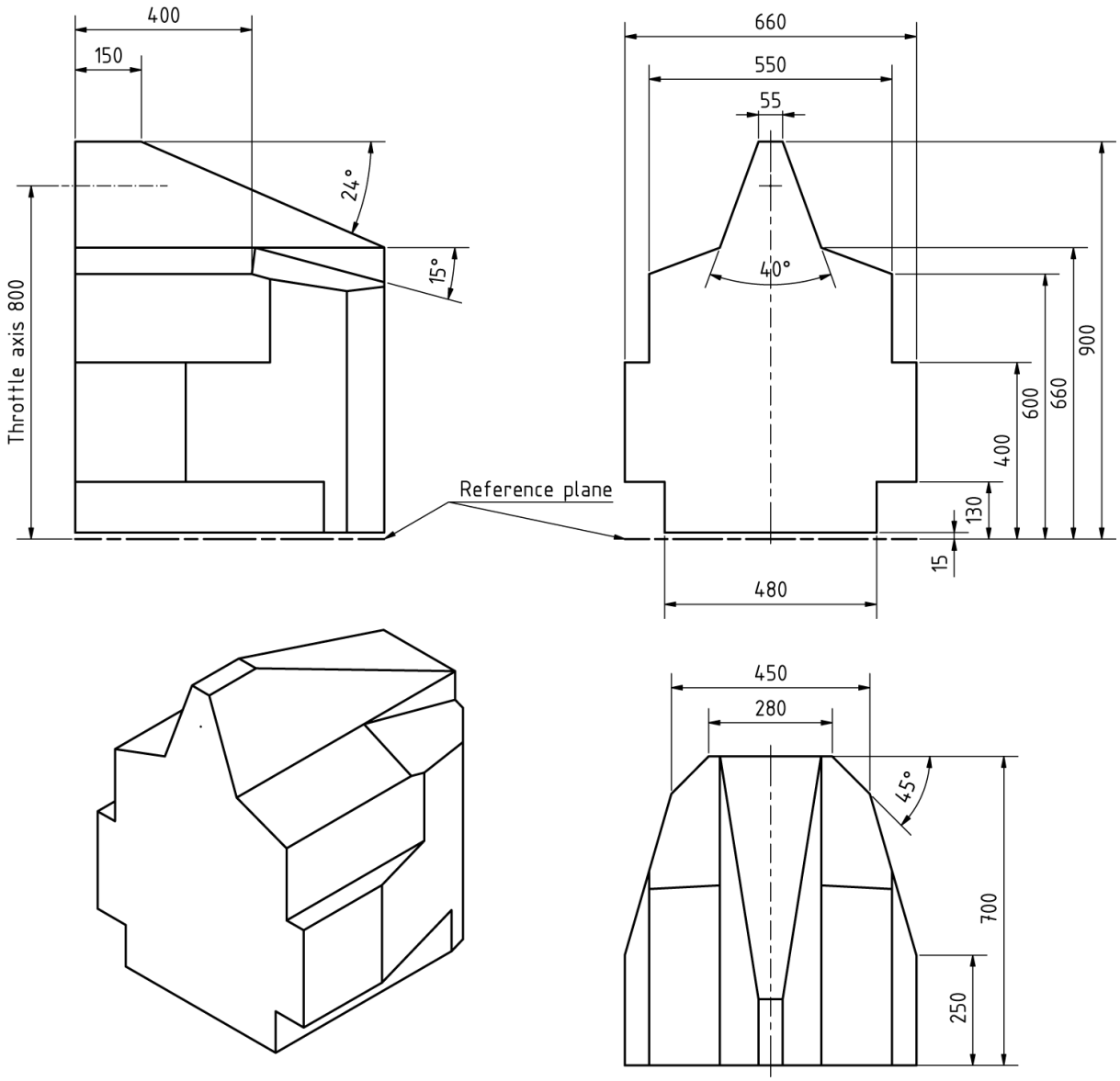

A radius of maximum 80mm may be added to the edges of the template.

Drawing 2.2

APPENDIX 3

ELECTRICAL SYSTEM CONNECTION INTERFACES

Positioning of the ECU connector:

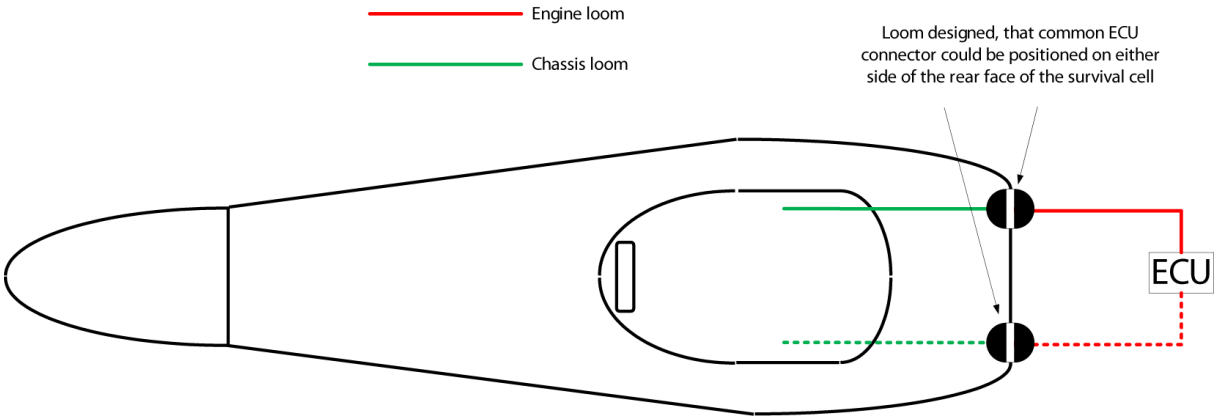

Connection / pin layout:

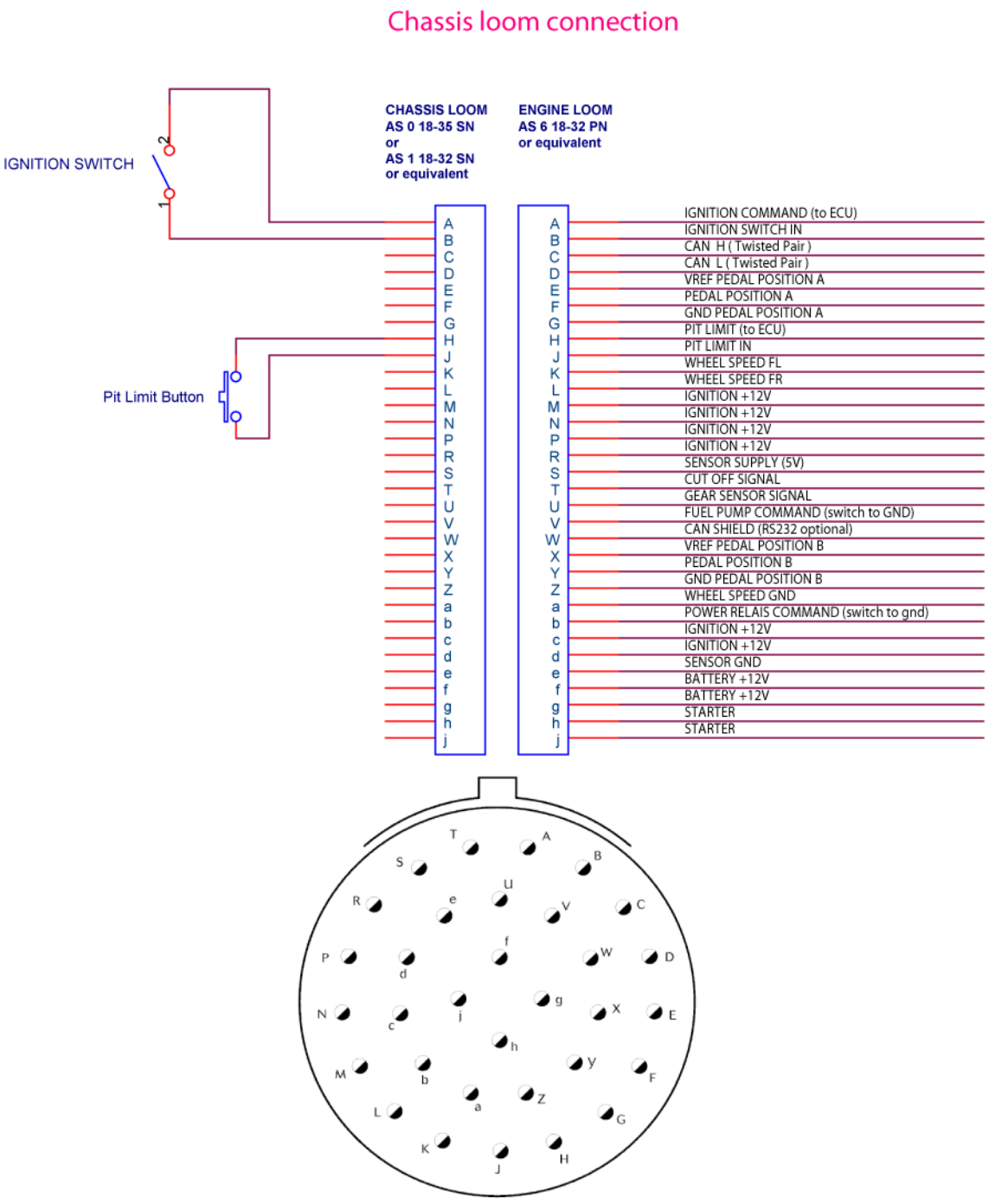

Pin No.	*Description*	*Min. diameter AWG*	*M/O for engine manufacturer*	*Notes*
A	ENGINE ENABLE / IGNITION SIGNAL	22	M	+12V or 0V feed (manufacturer option)
B	IGNITION SIGNAL SWITCH IN	22	M	ground to activate ("active low")
C	CAN 1 H (TWISTED PAIR)	22	M	standard CAN wiring requirements
D	CAN 1 L (TWISTED PAIR)	22	M	standard CAN wiring requirements
E	VREF PEDAL POSN A	22	M	+5V from ECU (limited current source capability)
F	PEDAL POSN A	22	M	0-5V signal to ECU
G	GND PEDAL POSN A	22	M	analog ground from ECU (limited current sink capability)
H	PIT LIMIT SIGNAL	22	O	+12V or 0V feed (manufacturer option)
J	PIT LIMIT SIGNAL IN	22	M	ground to activate ("active low")
K	LF WHEEL SPEED	22	M	0-5V frequency input (active on +Ve or -Ve crossing of 2.5V)
L	RF WHEEL SPEED	22	M	0-5V frequency input (active on +Ve or -Ve crossing of 2.5V)
M	IGNITION +12V	18	M	switched +12V from battery (via master switch)
N	IGNITION +12V	18	O	switched +12V from battery (via master switch)
P	IGNITION +12V	18	O	switched +12V from battery (via master switch)
R	IGNITION +12V	18	O	switched +12V from battery (via master switch)
S	SENSOR +5V	22	M	+5V from ECU (limited current source capability)
T	GEAR SHIFT/CUT SIGNAL	22	M	ground to activate ("active low")
U	GEAR POSITON SIGNAL	22	O	0-5V signal to ECU
V	FUEL PUMP COMMAND	22	M	ECU controlled : ground to activate ("active low")
W	CAN SHIELD / RS232		O	RS232 optional
X	VREF PEDAL POSN B	22	O	+5V from ECU (limited current source capability)
Y	PEDAL POSN B	22	M	0-5V signal to ECU
Z	GND PEDAL POSN B	22	O	analog ground from ECU (limited current sink capability)
a	WHEEL SPEED GND	22	M	chassis ground
b	POWER RELAY COMMAND	22	O	ECU controlled : ground to activate ("active low")
c	IGNITION +12V	18	O	switched +12V from battery (via master switch)
d	IGNITION +12V	18	O	switched +12V from battery (via master switch)
e	SENSOR GND	22	M	analog ground from ECU (limited current sink capability)
f	BATTERY +12V	18	M	+12V from battery (via master switch)
g	BATTERY +12V	18	O	+12V from battery (via master switch)
h	STARTER	18	M	feed to starter solenoid (from high current switch/relay on chassis side)
j	STARTER	18	M	feed to starter solenoid (from high current switch/relay on chassis side)
			M = mandatory	
			O = optional	

APPENDIX 4

APPROVAL OF SAFETY STRUCTURES

Approval of Safety Structures for Formula 4 cars

1) Safety structures

The following safety structures need to be approved by the FIA:

a) Survival cell.

b) Front and rear rollover structures.

c) Frontal impact-absorbing structure.

d) Rear impact-absorbing structure.

To approve any of the above structures, the presence of an FIA technical delegate is necessary. The static load tests need to be carried out with measuring equipment verified by the FIA; the dynamic impact tests need to be carried out at an FIA-approved institute.

2) Request for approval

In order for one of the above-mentioned safety structures to be approved, the FIA must receive a request from the rolling chassis manufacturer beforehand at the following address:

FIA Technical Department
2 Chemin de Blandonnet
CH 1215 Geneva 15
Switzerland
Tel.: +41 22 544 44 00
Fax: +41 22 544 44 50

3) Approval procedure

Having received a request for any of the above-mentioned tests, the FIA will arrange a date and venue with the rolling chassis manufacturer and will appoint a technical delegate to supervise these scheduled tests.

For each trip made by an FIA technical delegate to supervise any scheduled tests, the manufacturer will be charged a fee, which is levied annually by the FIA (€2730 for 2020).

Once all the safety structure tests have been carried out successfully and the manufacturer has settled the FIA fee, he will receive the FIA chassis test report for his car.

The rolling chassis manufacturer is obliged to supply all his customers with a copy of the FIA chassis test report together with the survival cell.